Encore® HD and XT Manual Powder Spray System Controller

Customer Product Manual
Part 1604870-05
Issued 04/18

For parts and technical support, call the Industrial Coating Systems Customer Support Center at (800) 433-9319 or contact your local Nordson representative.

This document is subject to change without notice.
Check http://emanuals.nordson.com/finishing for the latest version and available local languages.

NORDSON CORPORATION • AMHERST, OHIO • USA

Contact Us

Nordson Corporation welcomes requests for information, comments, and inquiries about its products. General information about Nordson can be found on the Internet using the following address: http://www.nordson.com.

Address all correspondence to:

Nordson Corporation
Attn: Customer Service
555 Jackson Street
Amherst, OH 44001

Notice

Trademarks

Change Record

Revision	Date	Change
01	01/14	New release
02	09/14	Re-zero procedure revised
03	01/15	New equipment labels
04	10/15	Revised illustrations and content
05	04/18	Revised some illustrations for new pump. Updated Certification Label.

Table of Contents

Section 1
Safety

Introduction

Read and follow these safety instructions. Task- and equipment-specific warnings, cautions, and instructions are included in equipment documentation where appropriate.

Make sure all equipment documentation, including these instructions, is accessible to all persons operating or servicing equipment.

Qualified Personnel

Equipment owners are responsible for making sure that Nordson equipment is installed, operated, and serviced by qualified personnel. Qualified personnel are those employees or contractors who are trained to safely perform their assigned tasks. They are familiar with all relevant safety rules and regulations and are physically capable of performing their assigned tasks.

Intended Use

Use of Nordson equipment in ways other than those described in the documentation supplied with the equipment may result in injury to persons or damage to property.

Some examples of unintended use of equipment include

- using incompatible materials
- making unauthorized modifications
- removing or bypassing safety guards or interlocks
- using incompatible or damaged parts
- using unapproved auxiliary equipment
- operating equipment in excess of maximum ratings

Regulations and Approvals

Make sure all equipment is rated and approved for the environment in which it is used. Any approvals obtained for Nordson equipment will be voided if instructions for installation, operation, and service are not followed.

All phases of equipment installation must comply with all federal, state, and local codes.

Personal Safety

To prevent injury follow these instructions.

- Do not operate or service equipment unless you are qualified.
- Do not operate equipment unless safety guards, doors, or covers are intact and automatic interlocks are operating properly. Do not bypass or disarm any safety devices.
- Keep clear of moving equipment. Before adjusting or servicing any moving equipment, shut off the power supply and wait until the equipment comes to a complete stop. Lock out power and secure the equipment to prevent unexpected movement.
- Relieve (bleed off) hydraulic and pneumatic pressure before adjusting or servicing pressurized systems or components. Disconnect, lock out, and tag switches before servicing electrical equipment.
- Obtain and read Safety Data Sheets (SDS) for all materials used. Follow the manufacturer's instructions for safe handling and use of materials, and use recommended personal protection devices.
- To prevent injury, be aware of less-obvious dangers in the workplace that often cannot be completely eliminated, such as hot surfaces, sharp edges, energized electrical circuits, and moving parts that cannot be enclosed or otherwise guarded for practical reasons.

Fire Safety

To avoid a fire or explosion, follow these instructions.

- Do not smoke, weld, grind, or use open flames where flammable materials are being used or stored.
- Provide adequate ventilation to prevent dangerous concentrations of volatile materials or vapors. Refer to local codes or your material SDS for guidance.
- Do not disconnect live electrical circuits while working with flammable materials. Shut off power at a disconnect switch first to prevent sparking.
- Know where emergency stop buttons, shutoff valves, and fire extinguishers are located. If a fire starts in a spray booth, immediately shut off the spray system and exhaust fans.
- Clean, maintain, test, and repair equipment according to the instructions in your equipment documentation.
- Use only replacement parts that are designed for use with original equipment. Contact your Nordson representative for parts information and advice.

Grounding

WARNING: Operating faulty electrostatic equipment is hazardous and can cause electrocution, fire, or explosion. Make resistance checks part of your periodic maintenance program. If you receive even a slight electrical shock or notice static sparking or arcing, shut down all electrical or electrostatic equipment immediately. Do not restart the equipment until the problem has been identified and corrected.

Grounding inside and around the booth openings must comply with NFPA requirements for Class II, Division 1 or 2 Hazardous Locations. Refer to NFPA 33, NFPA 70 (NEC articles 500, 502, and 516), and NFPA 77, latest conditions.

- All electrically conductive objects in the spray areas shall be electrically connected to ground with a resistance of not more than 1 megohm as measured with an instrument that applies at least 500 volts to the circuit being evaluated.
- Equipment to be grounded includes, but is not limited to, the floor of the spray area, operator platforms, hoppers, photoeye supports, and blow-off nozzles. Personnel working in the spray area must be grounded.
- There is a possible ignition potential from the charged human body. Personnel standing on a painted surface, such as an operator platform, or wearing non-conductive shoes, are not grounded. Personnel must wear shoes with conductive soles or use a ground strap to maintain a connection to ground when working with or around electrostatic equipment.
- Operators must maintain skin-to-handle contact between their hand and the gun handle to prevent shocks while operating manual electrostatic spray guns. If gloves must be worn, cut away the palm or fingers, wear electrically conductive gloves, or wear a grounding strap connected to the gun handle or other true earth ground.
- Shut off electrostatic power supplies and ground gun electrodes before making adjustments or cleaning powder spray guns.
- Connect all disconnected equipment, ground cables, and wires after servicing equipment.

Action in the Event of a Malfunction

If a system or any equipment in a system malfunctions, shut off the system immediately and perform the following steps:

- Disconnect and lock out electrical power. Close pneumatic shutoff valves and relieve pressures.
- Identify the reason for the malfunction and correct it before restarting the equipment.

Disposal

Dispose of equipment and materials used in operation and servicing according to local codes.

Section 2
Description

Introduction

See Figure 2-1. This manual covers the Encore® HD and XT manual powder spray system controller.

Figure 2-1 Encore HD/XT Manual Powder Spray System Controller

The system controller is used with the Encore HD with HDLV technology and the Encore XT with venturi technology. The Encore HD and XT controller may be used in the following systems:

- Encore HD and XT Wall Mount Systems
- Encore HD and XT Mobile Systems
- Encore HD and XT Rail Mount Systems
- Encore HD and XT Single and Dual Stand Alone
- Encore HD Color-on-Demand® Systems
- ColorMax® Powder Coating Systems
- Prodigy® to Encore Upgrade Systems

Specifications

Model: Encore HD and XT Interface Controller	
Input voltage rating	24 VDC, 2.75 A
Output voltage rating	+/– 19 VAC, 1A
Input air	6.0–7.6 bar (87–110 psi), <5µ particulates, dew point <10 °C (50 °F)
Maximum relative humidity	95% non-condensing
Ambient temperature rating	+15 to +40 °C (59–104 °F)
Hazardous location rating	Zone 22 or Class II, Division 2
Enclosure rating	IP6X, Dust ingress protection

Equipment Label

Controller Certification Label

ELECTROSTATIC HAND–HELD POWDER
SPRAY EQUIPMENT TYPE ENCORE®
NORDSON CORPORATION, AMHERST , OHIO U.S.A.

EN 50050–2
Ta: +15°C TO +40°C

FM14ATEX0052X
INPUT : Vo=24VDC
OUTPUT : Vo=±19VAC Io=1A

FOR: ADMISSIBLE COMBINATIONS OF DEVICES, SEE INSTRUCTION MANUAL.

Ex tc IIIB T60°C Dc

CE 1180 Ex II (2)3 D IP6X

DO NOT OPEN WHEN EXPLOSIVE ATMOSPHERE IS PRESENT

1606122–02

Section 3
System Setup

Rail Mount Installation

See Figure 3-1. Use the hardware shipped with the mounting kit to mount the controller to the pump cabinet stand as described below. Tighten all hardware securely.

NOTE: Bracket can be oriented top to bottom or bottom to top. Pictured below is the most common system orientation (bottom to top).

1. Install the controller rail mount bracket (2) to the arm on the product stand (1).
2. Install the controller (4) to the universal mounting bracket (3).
3. Install the universal mounting bracket (3) to the controller rail mount bracket (2).

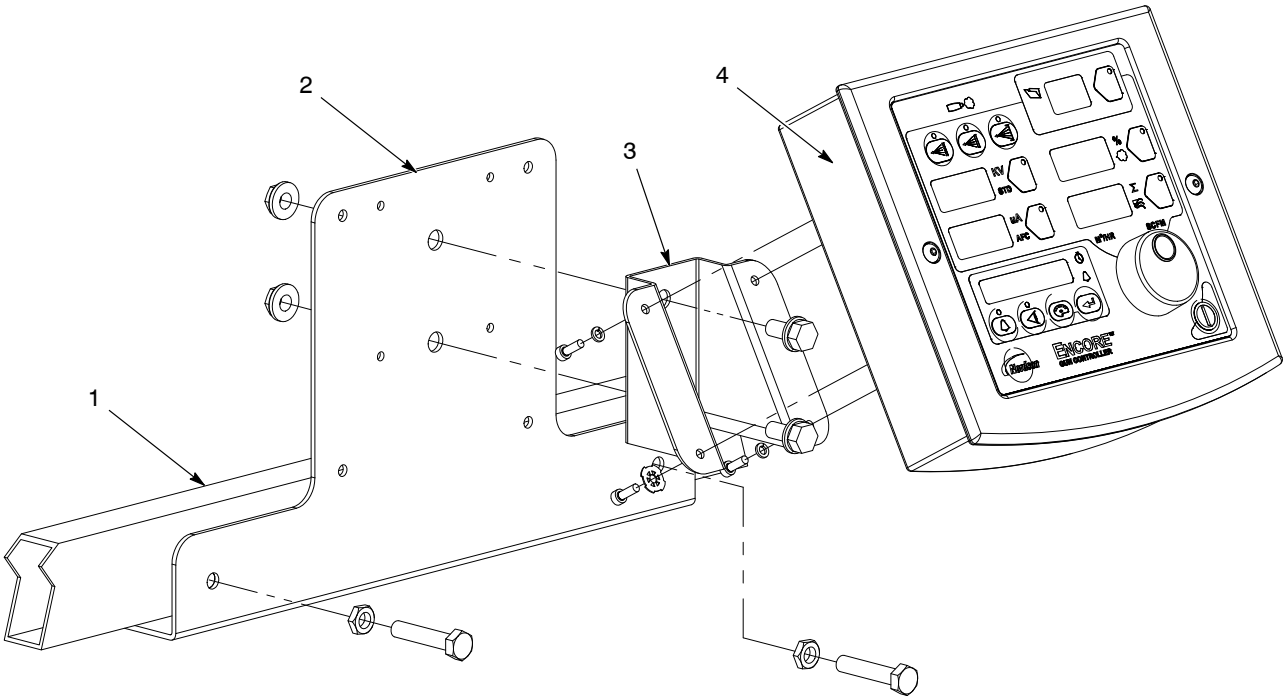

Figure 3-1 Controller Rail Mount Installation (Bottom to Top Orientation)

1. Product stand arm
2. Controller rail mount bracket
3. Universal mounting bracket
4. Encore HD controller

System Connections

System Diagram

WARNING: This diagram does not show system grounds. All conductive equipment in the spray area must be connected to a true earth ground. Use the grounding block supplied with the Nordson system.

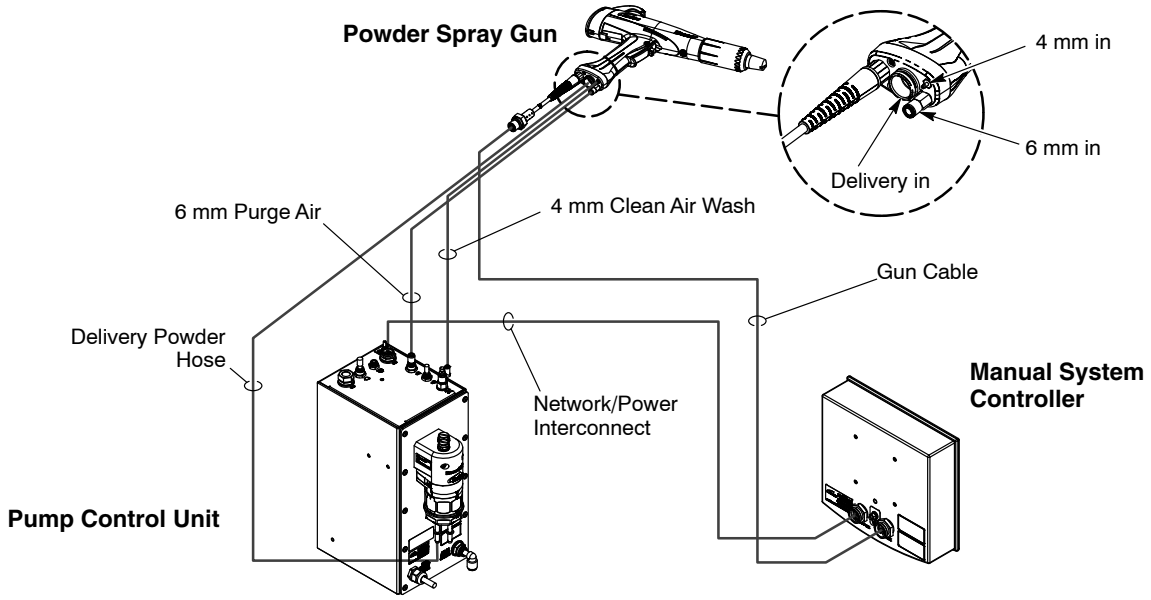

Figure 3-2 Typical HD System Diagram

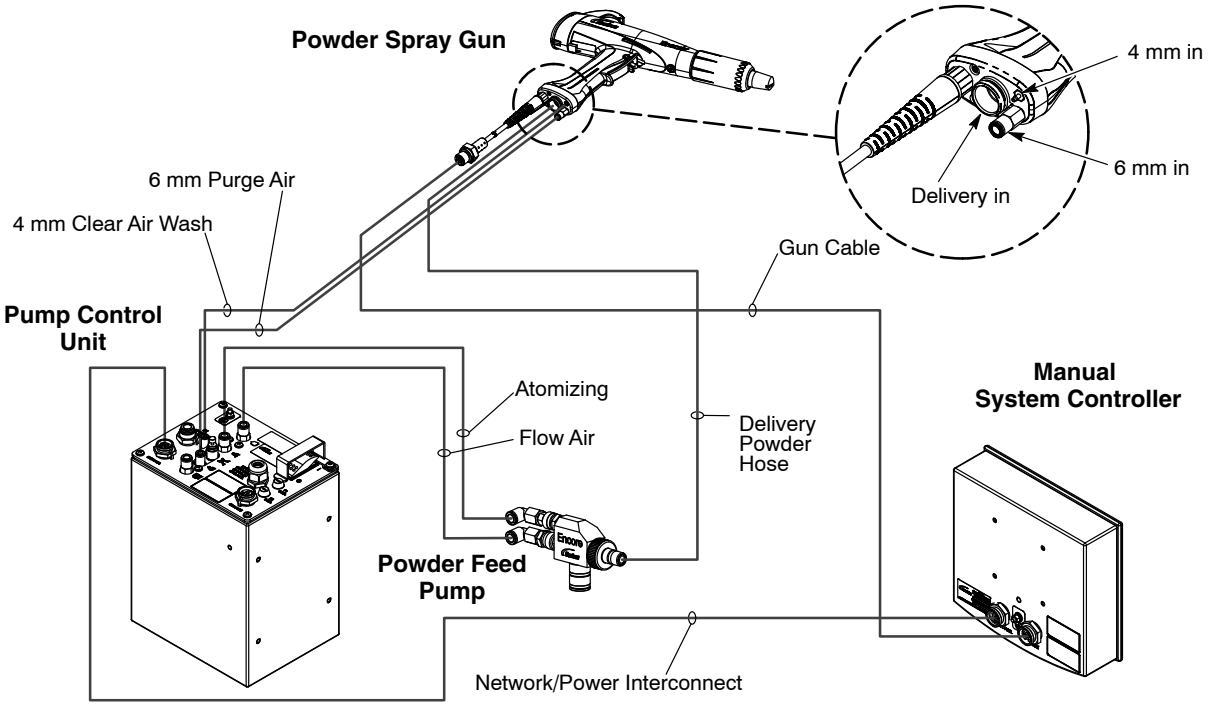

Figure 3-3 Typical XT System Diagram

Controller Connections

The system controller contains the displays and controls used to make controller function settings and spray settings.

See Figure 3-4. Use the network/power interconnect cable to connect the controller to the pump cabinet.

1. Securely attach the socket end of the interconnect cable to the NET/PWR plug (1) in the back of the controller.
2. Securely attach the pin ends of the interconnect cable to the NET/PWR 1 plug (2) in the top of the pump cabinet.
3. Repeat steps 1 and 2 to attach a second controller to the NET/PWR 2 plug at the top of the pump stand for a dual-gun system.

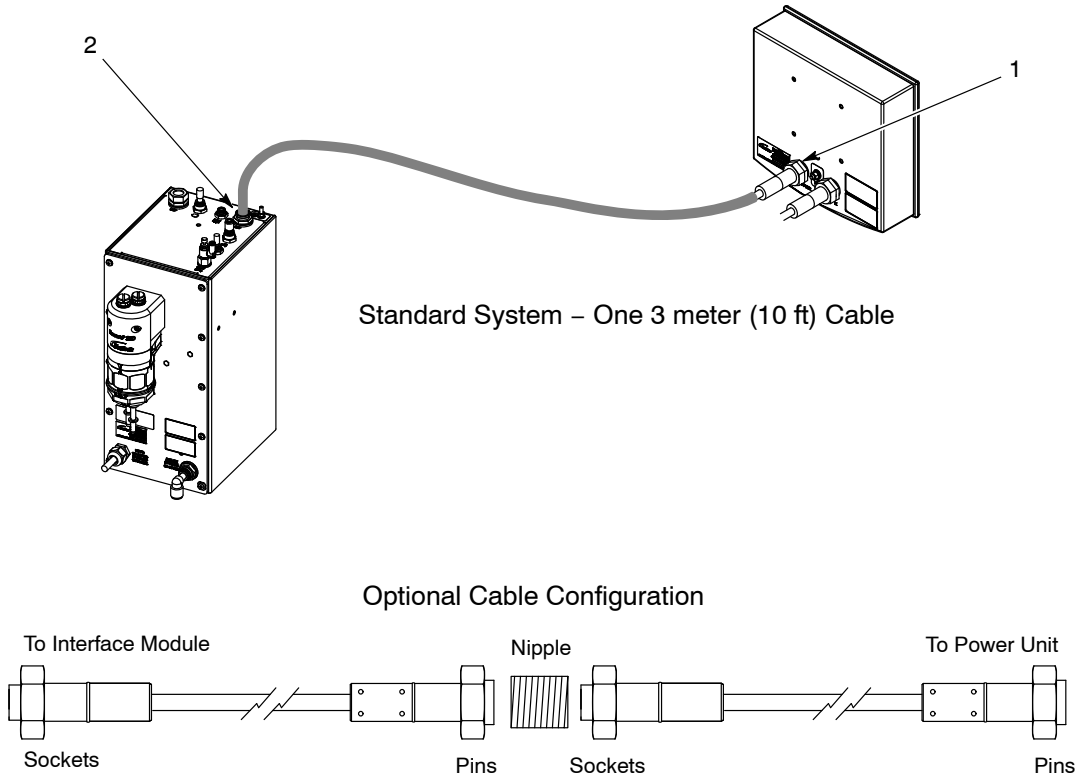

Figure 3-4 Encore Controller Interconnect Cable Connection

Section 4
Operation

WARNING: Allow only qualified personnel to perform the following tasks. Follow the safety instructions in this document and all other related documentation.

WARNING: This equipment can be dangerous unless it is used in accordance with the rules laid down in this manual.

WARNING: All electrically conductive equipment in the spray area must be grounded. Ungrounded or poorly grounded equipment can store an electrostatic charge which can give personnel a severe shock or arc and cause a fire or explosion.

European Union, ATEX, Special Conditions for Safe Use

1. The Encore XT manual applicator or the Encore HD manual applicator shall only be used with the Encore XT and HD interface controller and the Encore XT controller power unit or the Encore HD controller power unit over the ambient temperature range of +15 °C to +40 °C.
2. Equipment may only be used in areas of low impact risk.
3. Caution should be taken when cleaning plastic surfaces of the Encore controller and interface. There is a potential for static electricity build up on these components.

Daily Operation

WARNING: All conductive equipment in the spray area must be connected to a true earth ground. Failure to observe this warning may result in a severe shock.

NOTE: The controller is shipped with a default configuration that will allow you to start spraying powder as soon as you finish setting up the system. Refer to *Controller Configuration* on page 4-20 to reference a list of the defaults and preset change instructions.

Initial Startup

With no parts in front of the gun and the fluidizing and flow rate set to 0%, trigger the gun and record the µA output. Monitor the µA output daily, under the same conditions. A significant increase in µA output indicates a probable short in the gun resistor. A significant decrease indicates a resistor or voltage multiplier requiring service.

Startup

Figure 4-1 System Controls – Mobile System Shown

The following controller functions must be set up before operation:

Table 4-1 Function Settings

Function Number	Function Name	Function Values	Default HDLV Mode
F00	Gun Type	00=Encore XT/HD, 02=Robot	00
F01	Fluidizing	00=Hopper, 01=Box, 02=Disable	02
F18	Pump Type	00=Venturi, 01=HDLV, 02=COD	00
F19	Control Type	00=Local, 01=External	00
F20	Gun Number	1–4	00

When power is activated at the pump cabinet, the controller is turned on.

Upon startup, the function/help display screen will quickly scroll through various function settings, displaying the following information:

Table 4-2 Startup Display

Screen Code		Description
EncorE	Encore	Controller Type
ɔct	XT	Controller Type
HdLU Venturi Cod	HDLV or Venturi or COD	System Type
Loc Ecct	Loc or Ext	Local or External Control
Gun-1	Gun – 1, – 2, …	Gun Number, 1 – 4
GC-0.00	GC – X.XX	Gun Controller, Software Version
Gd-0.00	Gd – X.XX	Gun Display Module, Software Version
FL-0.00	FL – X.XX	Flow Module, Software Version

Select the desired preset and start production. Refer to *Presets* on page 4-5 for preset programming instructions.

The controller interface displays actual output when the gun is spraying, and the current preset setpoints when the gun is off.

Standby Button

Use the **Standby** button shown in Figure 4-1 to shut off the interface and disable the spray gun during breaks in production. When the controller interface is off, the spray gun cannot be triggered and the spray gun interface is disabled.

To shut off controller power, use the power switch on the pump control unit.

Factory Set Presets

Presets are programmed electrostatic and powder flow setpoints for a particular part or application. Up to 20 presets can be programmed.

The system is shipped with presets 1–3 already programmed. See Table 4-3 and 4-4 for default preset values for the both the HD and XT systems. Refer to *Presets* on page 4-5 for programming instructions.

Table 4-3 HD System Factory Set Presets

Preset	Electrostatics, Powder Flow	kV	µA	%	≋
1	Max kV, 150 g/min (20 lb/hr)	100	30	35	0.7
2	Max kV, 300 g/min (40 lb/hr)	100	30	80	1.0
3	Select Charge 3 (deep recess), 150 g/min (20 lb/hr)	100*	60*	35	0.7
* Select Charge Mode settings are factory set and cannot be changed.					

Table 4-4 XT System Factory Set Presets

Preset	Electrostatics, Powder Flow	kV	µA	%	∑
1	Max kV, 150 g/min (20 lb/hr)	100	30	45	3.0
2	Max kV, 300 g/min (40 lb/hr)	100	30	75	3.0
3	Select Charge 3 (deep recess), 150 g/min (20 lb/hr)	100*	60*	45	3.0
* Select Charge Mode settings are factory set and cannot be changed.					

Using the Controller Interface

Interface Components

Use the controller interface to make preset settings, view help codes, monitor system operation, and configure the controller. See Figure 4-2.

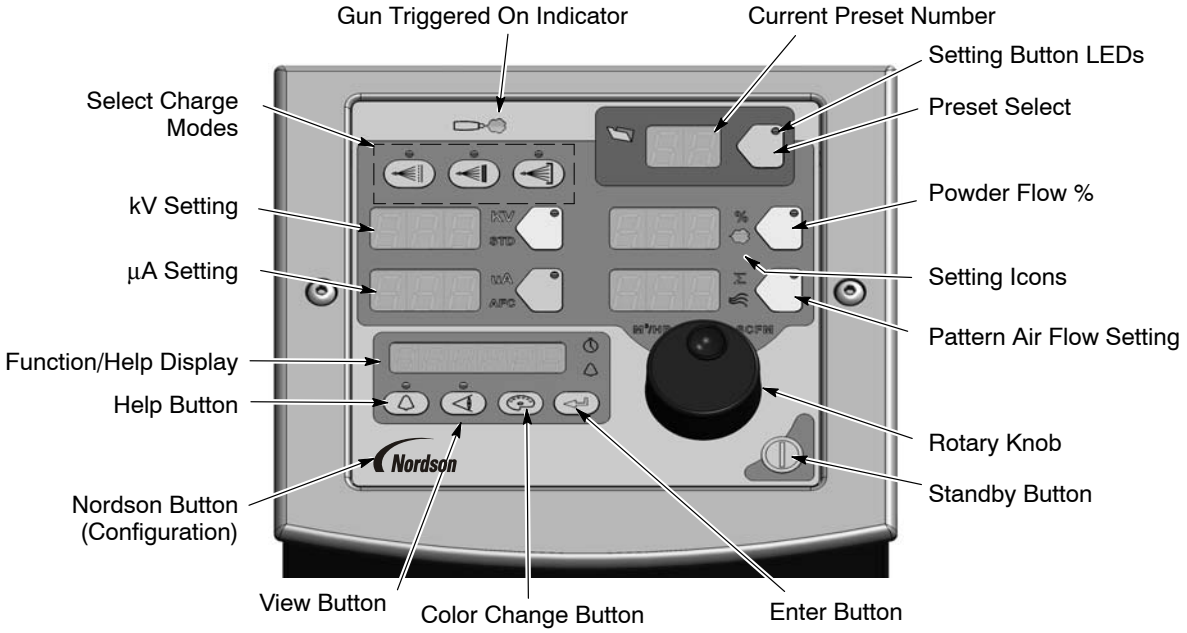

Figure 4-2 Controller Interface

Changing a Factory Configured Preset or Setpoint Value

See Figure 4-3.

Refer to View A. To select a preset or change a preset setpoint, press the **Preset Select** button or any **Setpoint** button. The button LED lights to indicate that it is selected.

The **Setpoint** icons will light to indicate the factory configured or operator selected setpoint values, allowing adjustments to be made to the following flow settings: **Select Charge Mode, kV, µA, Powder Flow %,** and **Pattern Air**.

Refer to View B. Use the **Rotary Knob** to change the selected setpoint: clockwise to increase, counter-clockwise to decrease. The setpoints reset to the minimum if increased past their maximum.

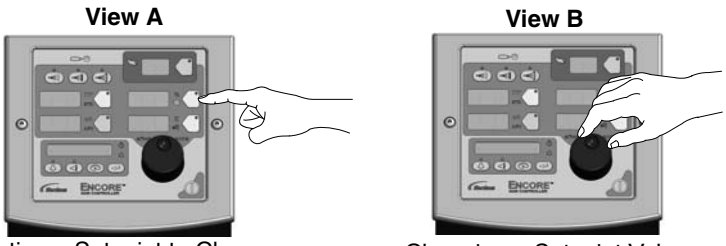

Selecting a Setpoint to Change

Changing a Setpoint Value

Figure 4-3 Selecting and Changing Setpoint Values

Presets

See Figure 4-4. The preset select button allows the operator to quickly change spray settings simply by changing the preset number. The operator can program the electrostatic and powder flow setpoints depending on the part being sprayed.

The controller can store 20 presets. Presets 1, 2, and 3 are programmed at the factory for the most common applications. Presets 4–20 can be programmed as needed. Refer to page 4-4 for the factory configured preset setpoint values.

Programming or Changing a Preset

1. Press the **Preset** button. The button LED lights.
2. Turn the **Rotary Knob**. The preset number increases from 1 to 20 then resets to 1.
3. With the desired preset selected, begin production. All preset electrostatic and powder flow values will be used.
4. To change a preset value, first choose the desired preset by using the **Rotary Knob**. Once the preset is selected, change the electrostatic and powder flow settings to the desired values.

5. The preset number will begin blinking, indicating a change has been made. **Save immediately** by pressing **Enter**. The preset number will only blink for a 5 second window. If the changes are not saved within this time frame, the change will only be temporary and the preset will switch back to the previous setting.
6. To begin production without saving the new settings, do not press **Enter**. The new values will be used for the current job, but the preset will keep original values for future use.

The setpoints for the selected preset are displayed when the gun is not triggered.

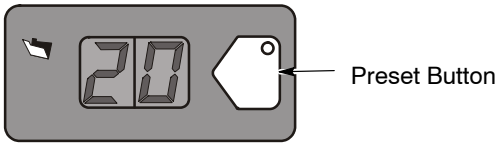

Figure 4-4 Preset Select

Electrostatic Settings

Electrostatic output can be set to Select Charge® mode (preconfigured), Custom mode, or Classic mode. Refer to the *Controller Configuration* section on page 4-20 to program Custom or Classic mode using the F03 function.

Select Charge® Mode

Select Charge mode provides 3 preconfigured electrostatic settings for common paint applications. The LEDs above the Select Charge mode buttons indicate the selected mode.

The Select Charge Modes and factory settings are:

Mode 1	Re-Coat	100 kV, 15 µA
Mode 2	Metallics	50 kV, 50 µA
Mode 3	Deep Recesses	100 kV, 60 µA

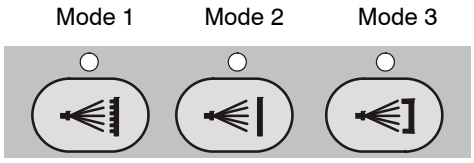

Figure 4-5 Select Charge Mode

NOTE: If the operator tries to adjust kV or µA values while a Select Charge mode is selected, the controller will switch to Custom or Classic mode.

Custom Mode

Custom Mode is the factory default mode. Custom mode allows the operator to adjust both kV and µA independently. STD and AFC icons are not displayed in Custom mode.

NOTE: Refer to *Controller Configuration* on page 4-20 for a list of the mode defaults and configuration instructions.

1. To set or adjust kV, press the **kV** button. The button LED lights to show that kV is selected.
2. Turn the **Rotary Knob** to increase or decrease the kV setpoint. The setpoint is automatically saved if it does not change for 3 seconds, or when any button is pressed.
3. To set or change the µA setpoint, press the **µA** button. The button LED lights to indicate that µA is selected.
4. Turn the **Rotary Knob** to increase or decrease the µA setpoint. The setpoint is automatically saved if it does not change for 3 seconds, or when any button is pressed.

NOTE: The default µA range is 10–50 µA. The limits of the range can be adjusted using function code F12 for the lower range and F13 for the upper range. Refer to *Controller Configuration* section on page 4-20.

Electrostatic Display:

Refer to View A. When the gun is not triggered the kV and µA setpoints are displayed.

Refer to View B. When the gun is triggered the actual kV and µA outputs are displayed.

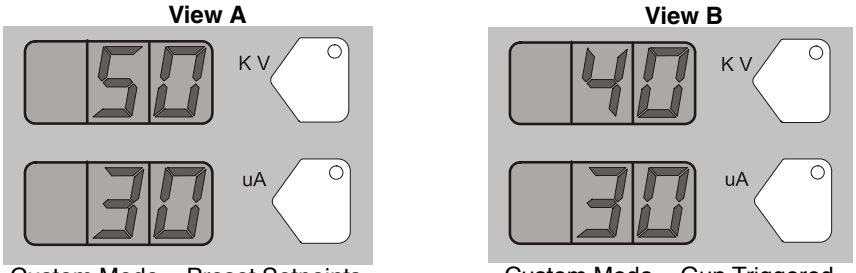

Custom Mode – Preset Setpoints

Custom Mode – Gun Triggered

Figure 4-6 Custom Mode – Electrostatic Displays

Encore Nano Feedback Control Mode (NFC)

To configure the controller for the NFC function, set the Electrostatic Control (F03) to the Custom mode (Custom= 00).

Use the NFC mode to adjust and set both kV and µA in lower value range.

See Function Settings on *Controller Configuration* section on page 4-20.

µA NFC Range and Settings

NFC mode allows the user to adjust the µA setting in increments of 0.1 µA below the value of 10.0 µA.

For example, the user can set the µA settings from 12, 11, 10, 9.9, 9.8, 9.7, ….. through 0.1.

kV NFC Range and Settings

NFC mode allows the user to adjust the kV setting in increments of 1 kV below the value of 25 kV.

For example, the user can set the kV settings from 25, 24, 23, 22, ….. through 0.

Classic Mode

Classic Mode allows you to control kV (STD) output or µA (AFC) output, but not both at the same time.

NOTE: To use Classic mode, the controller must be configured under function setting F03. Refer to *Controller Configuration* on page 4-20.

Adjust kV: Classic Mode: Standard (STD)

NOTE: Use the Classic Standard mode to adjust and set kV. µA cannot be adjusted in standard mode.

1. To adjust the kV setpoint, press the **kV** button. The button LED lights to show that kV is selected.
2. Turn the **Rotary Knob** to increase or decrease the kV setpoint. The setpoint automatically saves in 3 seconds or when any button is pressed.

Electrostatic Display:

Refer to View A. When the gun is not triggered the kV setpoint is displayed.

Refer to View B. When the gun is triggered the actual kV and µA outputs are displayed.

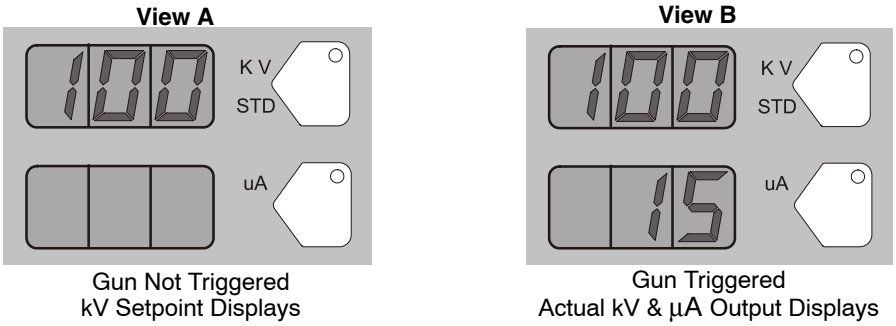

Figure 4-7 STD Mode – Electrostatic Displays

Adjust µA: Classic Mode: AFC

NOTE: Use the AFC mode to adjust and set µA output limits. kV cannot be adjusted in AFC mode. kV setting is automatically set to 100 kV.

1. To adjust µA, press the **µA** button. The button LED lights to show that µA is selected.
2. Turn the **Rotary Knob** to increase or decrease the µA setpoint. The setpoint is automatically saved if it does not change for 3 seconds, or when any button is pressed.

NOTE: The default µA range is 10–50 µA. The limits of the range can be adjusted. Refer to *Controller Configuration* on page 4-20.

Electrostatic Display:

Refer to View A. When the gun is not triggered the µA setpoint is displayed.

Refer to View B. When the gun is triggered the actual kV and µA outputs are displayed.

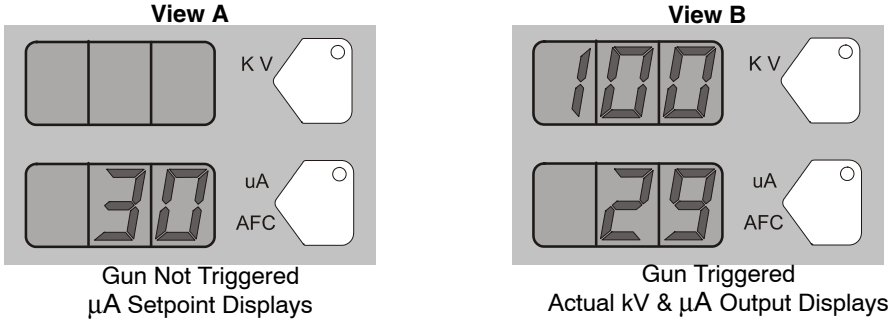

Figure 4-8 AFC Mode – Electrostatic Displays

Help Codes


The Help icon in the Function/Help display lights if a problem occurs.

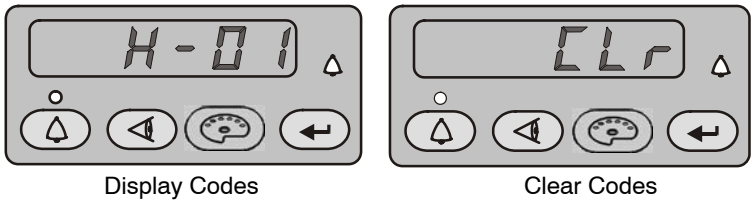

Figure 4-9 Displaying and Clearing Help Codes


To display the Help codes, press the **Help** button. The controller retains the last 5 codes in memory. Use the **Rotary Knob** to scroll through the codes. The display blanks if there is no activity for 5 seconds.


To clear the Help codes, scroll through them until **CLr** is displayed, then press the **Enter** button. The Help icon stays lit until the controller clears the codes.

Refer to *Section 5, Troubleshooting*, for help code troubleshooting, general system troubleshooting, and controller wiring diagram.

Assist Air Setting, Fast Flow Setting, and Software Versions

 The **View** button allows the user access to adjust Assist Air, Fast Flow preset values and to view software versions. See Tables 4-5 and 4-8.

Press the **View** button consecutively to display, in order, the following functions:

Table 4-5 View Button Functions

Function Code	Function Name	Description
AA 00	Assist Air Setting	Allows user to set value between −50% and +50%
FF 0	Fast Flow Setting	Allows user to choose between 0 (Normal) and F (Fast)
GC – X.XX	Gun Controller Software Version	View only
Gd – X.XX	Gun Display Module Software Version	View only
FL – X.XX	Flow Module Software Version	View only
Hd – X.XX	Hardware Version for Main Control Board	View only

To adjust the Assist Air or Fast Flow settings:

1. Press the **View** button until the appropriate code is displayed. The code AA or FF will be blinking.
2. Press the **Enter** button to select. The value will now be blinking.
3. Use the **Rotary Knob** to select the desired setting.
4. Press **Enter** to save.
5. After 5 seconds the display will go blank. If **Enter** is not pressed, the value will automatically save.

NOTE: Adjustments to Assist Air and Fast Flow preset values only affect the preset you are currently viewing. A user can program as many as 20 presets, and each preset must be adjusted individually where required.

Powder Flow Settings

HD Powder Flow Settings

NOTE: Powder flow control modes can only be adjusted for Venturi systems. Refer to the *XT Powder Flow Settings* section for more details.

Powder flow is controlled by a timing sequence that is stored in a software look-up table. The cycle rate of the pump coupled with the suction duration, controls the number of pulses as well as the size of each pulse of powder. Each setpoint from 1–100 has its own recipe for pump operation. As you change the powder flow set point, these parameters change to increase or decrease the mass powder flow. Unlike the venturi technology, the powder mass flow is not affected by the pattern air setting. The pattern air will change the delivery velocity as the powder exits the gun as well as change the atomization of the powder cloud.

- Powder flow output from 0–100%
- Pattern air from 0.20–4.00 cfm in 0.05 increments

Setting Powder Flow Setpoints

To set flow or pattern air:

1. Press the **Flow** or **Pattern** button. The green LED on the selected button lights up.
2. Turn the **Rotary Knob** to increase or decrease the setpoints. The setpoint is automatically saved if it does not change for 3 seconds or when any button is pressed.

Flow or Pattern Setpoint Display:

- When the spray gun is not triggered the setpoints are displayed.
- When the spray gun is triggered the actual flows are displayed.

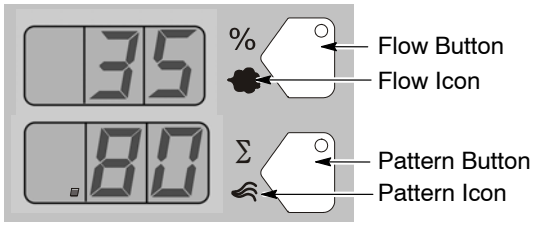

Figure 4-10 Flow or Pattern Setpoints

NOTE: Increasing pattern air will not increase powder flow output.

XT Powder Flow Settings

Two modes of powder flow control are available for XT systems:

Smart Flow – This is the factory default mode. In this mode, you set Total Air (powder velocity) and Flow Air % (powder flow) setpoints. The controller automatically adjusts flow and atomizing air to the pump based on the setpoints. When the controller is configured for Smart Flow mode, the % and ∑ icons are lit.

Classic Flow – This is the standard method of setting powder flow and velocity, by setting flow air and atomizing air flows separately and balancing them manually for optimum results. When the controller is configured for Classic Flow mode, the flow and atomizing air icons are lit.

NOTE: Refer to *Controller Configuration* on page 4-20 for a list of the mode defaults and configuration instructions.

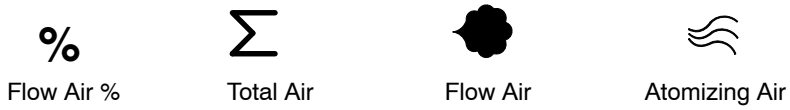

Figure 4-11 Powder Flow Icons

Smart Flow Mode

In Smart Flow mode, Total Flow ∑ sets the velocity of the powder flow, while Flow Air % sets the powder flow rate. Powder velocity is inversely related to transfer efficiency; the higher the velocity, the lower the transfer efficiency.

When making Smart Flow settings, set the Total Flow ∑ setpoint first to obtain the desired pattern size and penetration, then set the Flow Air % setpoint for the desired powder flow.

Flow Air %: 0–100%. The actual percentage range available varies depending on the total air setpoint and the maximum and minimum outputs for flow and atomizing air.

Total Flow ∑: 2.55–10.2 M^3/HR, minimum 0.17 M^3/HR increments, or 1.5–6.0 SCFM, minimum 0.1 SCFM increments.

See Tables 4-6 and 4-7 for examples of possible Smart Flow settings and their equivalents in Atomizing and Flow Air pressures and flows. Figure 4-12 shows the effects of changes in Total Flow and Flow Air % settings.

The Smart Flow tables provide a range of possible Total Flow and Flow Air % setpoints. Read across to the vertical axis for the equivalent atomizing air flow and pressure. Read down to the horizontal axis for the equivalent flow-air flow and pressure.

The tables show that as you increase Total Flow powder velocity increases while the maximum Flow Air % remains the same. Conversely, for a given Total Flow setting, each increase in Flow Air % increases powder flow.

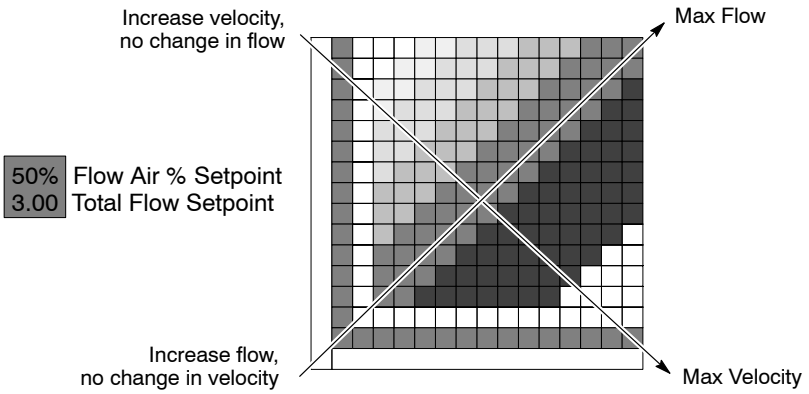

Figure 4-12 Reading the Smart Flow Tables

Setting Smart Flow Setpoints

To set flow air % or total flow ∑ :

1. Press the **%** or ∑ button. The LED on the selected button lights.
2. Turn the **Rotary Knob** to increase or decrease the setpoint. The setpoint is automatically saved if it does not change for 3 seconds or when any button is pressed.

NOTE: If Total Flow is set to zero, the Flow Air % setpoint cannot be set to anything but zero, and powder cannot be sprayed. To set Flow Air %, set Total Flow to a value greater than zero.

- When the spray gun is not triggered the setpoints are displayed.
- When the spray gun is triggered the displays show actual flows.

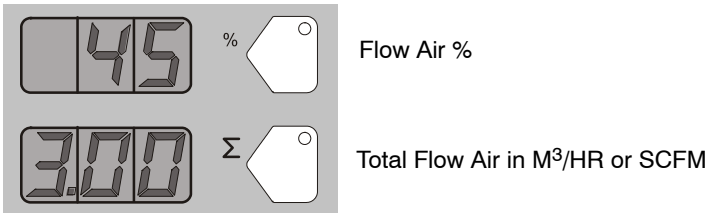

Figure 4-13 Smart Flow Mode – Flow Air % or Total Flow ∑

Smart Flow Settings – Metric Units

Powder Velocity (M^3/Hr) (Total Flow) $\sum$		
Low	<3.40	**Air Flow Settings:** 1.0 bar Atomizing 2.0 bar Flow **Powder Output:** 150 g/min.
Soft	3.40–4.25	
Medium	4.25–5.53	
Firm	5.53–7.23	
High	>7.23	**Max. Powder Flow Rate: ★**

Table 4-6 Smart Flow Settings – Metric Units

Atomizing															
	0.4	0.85	X	X	67% 2.55	71% 2.97	75% 3.40	78% 3.82	80% 4.25	82% 4.67	83% 5.10	85% 5.52	86% 5.95	87% 6.37	88% 6.80 ☆
	0.6	1.27	X	50% 2.54	57% 2.97	63% 3.39	67% 3.82	70% 4.24	73% 4.67	75% 5.09	77% 5.52	79% 5.94	80% 6.37	81% 6.79	82% 7.22
	0.9	1.70	33% 2.55	43% 2.97	50% 3.40	55% 3.82	60% 4.25	64% 4.67	67% 5.10	69% 5.52	71% 5.95	73% 6.37	75% 6.80	76% 7.22	78% 7.65
	1.2	2.12	29% 2.97	37% 3.39	45% 3.82	50% 4.24	55% 4.67	58% 5.09	62% 5.52	64% 5.94	67% 6.37	69% 6.79	71% 7.22	72% 7.64	74% 8.07
	1.6	2.55	25% 3.40	33% 3.82	40% 4.25	45% 4.67	50% 5.10	54% 5.52	57% 5.95	60% 6.37	63% 6.80	65% 7.22	67% 7.65	68% 8.07	70% 8.50
	1.9	2.97	22% 3.82	30% 4.24	36% 4.67	42% 5.09	46% 5.52	50% 5.94	53% 6.37	56% 6.79	59% 7.22	61% 7.64	63% 8.07	65% 8.49	67% 8.92
	2.3	3.40	20% 4.25	27% 4.67	33% 5.10	38% 5.52	43% 5.95	47% 6.37	50% 6.80	53% 7.22	56% 7.65	58% 8.07	60% 8.50	62% 8.92	64% 9.35
	2.7	3.82	18% 4.67	25% 5.09	31% 5.52	36% 5.94	40% 6.37	44% 6.79	47% 7.22	50% 7.64	53% 8.07	55% 8.49	57% 8.92	59% 9.34	61% 9.77
	3.1	4.25	17% 5.10	23% 5.52	29% 5.95	33% 6.37	38% 6.80	41% 7.22	44% 7.65	47% 8.07	50% 8.50	52% 8.92	55% 9.35	56% 9.77	58% 10.20
	3.5	4.67	15% 5.52	21% 5.94	27% 6.37	31% 6.79	35% 7.22	39% 7.64	42% 8.07	45% 8.49	48% 8.92	50% 9.34	52% 9.77	54% 10.19	X
	3.6	5.10	14% 5.95	20% 6.37	25% 6.80	29% 7.22	33% 7.65	37% 8.07	40% 8.50	43% 8.92	45% 9.35	48% 9.77	50% 10.20	X	X
		5.52	13% 6.37	19% 6.79	24% 7.22	28% 7.64	32% 8.07	35% 8.49	38% 8.92	41% 9.34	44% 9.77	46% 10.19	X	X	X
		5.95	13% 6.80	18% 7.22	22% 7.65	26% 8.07	30% 8.50	33% 8.92	36% 9.35	39% 9.77	42% 10.20	X	X	X	X
		M^3/Hr	0.85	1.27	1.70	2.12	2.55	2.97	3.40	3.82	4.25	4.67	5.10	5.52	5.95
	BAR		0.2	0.3	0.5	0.8	1.1	1.4	1.7	2.0	2.3	2.6	2.9	3.2	3.5
	Flow														

Smart Flow Settings – English Units

Powder Velocity (SCFM) (Total Flow) Σ		
Low	<2.00	**Air Flow Setting:** 15 psi Atomizing 20 psi Flow **Powder Output:** 20 lb/hr
Soft	2.00–2.50	
Medium	2.75–3.25	
Firm	3.50–4.25	
High	>4.25	**Max. Powder Flow Rate: ★**

Table 4-7 Smart Flow Settings – English Units

Atomizing															
	5	0.50	X	X	67% 1.50	71% 1.75	75% 2.00	78% 2.25	80% 2.50	82% 2.75	83% 3.00	85% 3.25	86% 3.50	87% 3.75	★88% 4.00
	9	0.75	X	50% 1.50	57% 1.75	63% 2.00	67% 2.25	70% 2.50	73% 2.75	75% 3.00	77% 3.25	79% 3.50	80% 3.75	81% 4.00	82% 4.25
	13	1.00	33% 1.50	43% 1.75	50% 2.00	56% 2.25	60% 2.50	64% 2.75	67% 3.00	69% 3.25	71% 3.50	73% 3.75	75% 4.00	76% 4.25	78% 4.50
	18	1.25	29% 1.75	38% 2.00	44% 2.25	50% 2.50	55% 2.75	58% 3.00	62% 3.25	64% 3.50	67% 3.75	69% 4.00	71% 4.25	72% 4.50	74% 4.75
	23	1.50	25% 2.00	33% 2.25	40% 2.50	45% 2.75	50% 3.00	54% 3.25	57% 3.50	60% 3.75	63% 4.00	65% 4.25	67% 4.50	68% 4.75	70% 5.00
	28	1.75	22% 2.25	30% 2.50	36% 2.75	42% 3.00	46% 3.25	50% 3.50	53% 3.75	56% 4.00	59% 4.25	61% 4.50	63% 4.75	65% 5.00	67% 5.25
	34	2.00	20% 2.50	27% 2.75	33% 3.00	38% 3.25	43% 3.50	47% 3.75	50% 4.00	53% 4.25	56% 4.50	58% 4.75	60% 5.00	62% 5.25	64% 5.50
	40	2.25	18% 2.75	25% 3.00	31% 3.25	36% 3.50	40% 3.75	44% 4.00	47% 4.25	50% 4.50	53% 4.75	55% 5.00	57% 5.25	59% 5.50	61% 5.75
	45	2.50	17% 3.00	23% 3.25	29% 3.50	33% 3.75	38% 4.00	41% 4.25	44% 4.50	47% 4.75	50% 5.00	52% 5.25	55% 5.50	57% 5.75	58% 6.00
	51	2.75	15% 3.25	21% 3.50	27% 3.75	31% 4.00	35% 4.25	39% 4.50	42% 4.75	45% 5.00	48% 5.25	50% 5.50	52% 5.75	54% 6.00	X
	52	3.00	14% 3.50	20% 3.75	25% 4.00	29% 4.25	33% 4.50	37% 4.75	40% 5.00	43% 5.25	45% 5.50	48% 5.75	50% 6.00	X	X
		3.25	13% 3.75	19% 4.00	24% 4.25	28% 4.50	32% 4.75	35% 5.00	38% 5.25	41% 5.50	43% 5.75	46% 6.00	X	X	X
		3.50	13% 4.00	18% 4.25	22% 4.50	26% 4.75	30% 5.00	33% 5.25	36% 5.50	39% 5.75	42% 6.00	X	X	X	X
		SCFM	0.50	0.75	1.00	1.25	1.50	1.75	2.00	2.25	2.50	2.75	3.00	3.25	3.50
	PSI		3	5	8	12	16	20	24	29	34	38	42	47	51
	Flow														

Classic Flow Mode Settings

In Classic Flow mode, flow air and atomizing air ranges are:

- Flow air from 0–5.95 M^3/HR (0–3.5 SCFM in 0.05 increments).
- Atomizing air from 0–5.95 M^3/HR (0–3.5 SCFM in 0.05 increments).

To set flow or atomizing air:

1. Press the **Flow** or **Atomizing** button. The green LED on the selected button lights.
2. Turn the **Rotary Knob** to increase or decrease the setpoints. The setpoint is automatically saved if it does not change for 3 seconds or when any button is pressed.

- When the spray gun is not triggered the setpoints are displayed.
- When the spray gun is triggered the actual flows are displayed.

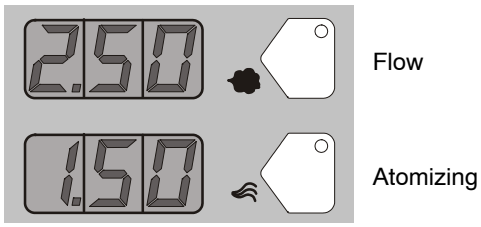

Figure 4-14 Classic Mode – Flow Air or Atomizing Air Flow Setpoints

Color Change Purge

NOTE: Before starting the purge cycle, make sure the guns are aimed into the booth.

NOTE: Always remove the pickup tube from the powder source and place into an appropriate collector before pressing the color change button.

Refer to Figure 4-2 for controller interface illustration.

HDLV System Purge

Purge Choices

For an HDLV system without Color-on-Demand, the purge choices are:

- **SINGLE**- Only the gun connected to this controller is purged when the Color Change key is pressed.
- **DUAL** - Both guns (two gun systems) are purged.
- **DISABLED** - Color Change key is disabled. Automatically selected if the Gun Type is set to HDLV-COD or EXTNAL-COD
- **REMOTE** - Purging is controlled by the iControl system.

HDLV Purge Cycle Instructions

 The color change purge button allows the operator to automatically begin the purge cycle.

Press the **Color Change** button on the controller and then press **Enter** ↵.

The Automatic Purge Cycle operates as follows:

Cycle 1 – **Soft Purge** – Assist air is directed through the pump and siphon tubing back to the powder supply (Soft Siphon), then through the pump and delivery tubing to the spray gun (Soft Gun). This clears the pump, tubing, and gun of powder.

Cycle 2 – **Pulse Purge** – Purge air is directed in pulses from the pump to the powder supply (Siphon Pulses), then from the pump to the spray gun (Gun Pulses). Pulse On sets duration of each pulse, Pulse Off sets time between pulses.

HDLV Purge Settings

(F26) SOFT SIPHON: 1.00–10.00 seconds, in 0.25 steps, default is 8 seconds.

(F27) SOFT GUN: 1.00–10.00 seconds, in 0.25 steps, default is 8 seconds.

(F28) PULSE ON: 0.1–1.00 seconds, in 0.05 steps, default is 0.5 seconds.

(F29) PULSE OFF: 0.1–2.00 seconds, in 0.05 steps, default is 1.5 seconds.

(F30) SIPHON PULSES: 1–99 pulses, default is 7.

(F31) GUN PULSES: 1–99 pulses, default is 13.

NOTE: Refer to functions F22 through F33 in the *Controller Configuration* section on page 4-20 for more information.

Color-on-Demand (COD) System Purge

Press the **Color Change** button on the Color-on-Demand controller and then press **Enter** ↵. Refer to the *Prodigy Color-on-Demand Manual System* manual for more detail.

The Automatic COD Purge Cycle operates as follows:

1. **Manifold Purge** – The dump valve opens. The pump speeds up to 100% of flow to pump the remaining powder out of the manifolds.
2. **Soft Purge** – Assist air is directed through the pump and siphon tubing back to the powder supply (Soft Siphon), then through the pump and delivery tubing to the spray gun (Soft Gun). This clears the pump, powder tubing, and gun of powder.
3. **Pulse Purge** – Purge air is directed in pulses from the pump to the powder supply (Siphon Pulses), then from the pump to the spray gun (Gun Pulses). Pulse On sets duration of each pulse, Pulse Off sets time between pulses.
4. **Powder Pre-Load** – The new color powder is pumped to the spray gun for the set time at 100% of flow to load the system for production.

The color change cycle is started by the operator or by a remote signal to the Color-On-Demand controller. The operator starts the color change by selecting a new color and touching the **Start** button on the touch screen, or by pressing a foot pedal then selecting a new color before the powder pre-load begins.

NOTE: Powder type, humidity, tubing length, and other variables can change the effectiveness of these settings. You may have to adjust these settings to avoid color cross-contamination and maintain performance.

COD Purge Settings

(F33) MANIFOLD PURGE: 0–10.00 seconds, in 0.25 steps, default is 2 seconds.

(F26) SOFT SIPHON: 2.00–10.00 seconds, in 0.25 steps, default is 3.5 seconds.

(F27) SOFT GUN: 1–10.00 seconds, in 0.25 steps, default is 2 seconds.

(F28) PULSE ON: 0.1–2.00 seconds, in 0.05 steps, default is 0.5 seconds.

(F29) PULSE OFF: 0.1–2.00 seconds, in 0.05 steps, default is 1.5 seconds.

(F30) SIPHON PULSES: 1–99 pulses, default is 20.

(F31) GUN PULSES: 1–99 pulses, default is 18.

(F32) POWDER PRE-LOAD: 0–99 seconds, default is 4.

NOTE: To return to the factory defaults, manually reset F15 to 02. Refer to the *Controller Configuration* section on page 4-20 for more information.

Controller Configuration

Opening the Function Menu and Setting Preferences

Nordson Press and hold the **Nordson** button for 5 seconds. The Function/Help display lights to show the function numbers and values. Use the functions to configure the controller for your application.

The function numbers are in the form F00–00 (Function Number–Function Value).

To scroll through the function numbers rotate the knob. To select the displayed function number, press the **Enter** button.

When the function is selected the function value blinks. To change the function value, rotate the knob. Press the **Enter** button to save the change and exit the value, so that rotating the knob now scrolls through the function numbers.

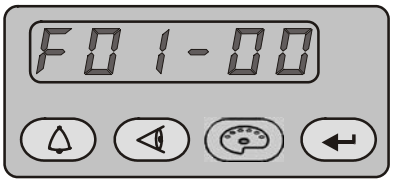

Function 01, Value 00

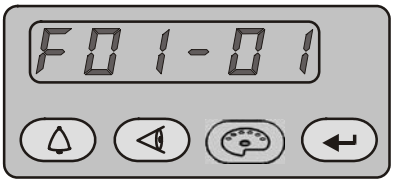

Function 01, Value 01

Figure 4-15 Displaying and Changing Configuration Functions

Table 4-8 Function Settings

Function Number	Function Name	Function Values	Description	Default HDLV Mode (Encore HD)
F00	Gun Type	00=Encore XT/HD 02=Robot	Customize for type of gun being used. Must be programmed during initial setup.	00
F01	Fluidizing	00=Hopper 01=Box 02=Disable	Customize for type of fluidizing system used. Must be programmed during initial setup.	Varies
F02	Display Units	00=SCFM 01=M^3/HR	Choose standard cubic feet per minute or cubic meters per hour.	00
F03	Electrostatic Control	00=Custom 01=Classic	Choose custom or classic feedback control mode. See page 4-6 for more information.	00
F04	Powder Flow Control	00=Smart 01=Classic	Choose smart or classic mode. See page 4-12 for more information.	N/A
F05	Keypad Lockout	00=Unlocked 01=Preset Only 02=All Locked 03=Preset Locked 04=Reset Password	00 = All keypad functions are unlocked. 01 = All keypad functions are locked except preset functions. 02 = All keypad functions are locked. 03 = All preset functions are locked; other keypad functions can be adjusted. 04 = Reset password.	00
F06	Vibratory Box Delay Off	00–90 Seconds On=Continuous Operation	Sets the number of seconds the vibratory box continues to operate after the gun trigger is released. Choose from 0 to 90 seconds, or choose ON for continuous operation.	30

Continued...

Function Number	Function Name	Function Values	Description	Default HDLV Mode (Encore HD)
F07	Maintenance Timer, Gun	00=View Timer 01=Set Timer (000=Disable through 999) 02=Reset (00, 01)	Sets a timer for when gun maintenance is due. 00 is view only. 01 allows you to choose 000 to disable the timer, or choose from 1 to 999 days. 02 resets the timer to 00.	000
F08	Setting Trigger Function	00=Increase/Decrease 01=Disable 02=Flow 03=Preset 04=Purge 05=Trigger	Sets the desired function for the spray gun trigger.	00
F09	Help Codes	00=Enable 01=Disable	Enable or disable help codes.	00
F10	Zero Reset (Flow)	00=Normal 01=Reset	Refer to page 5-13 for the Zero Reset procedure.	00
F11	Gun Display Errors	00=Flashing 01=Disable	Enable or disable gun display errors. Display will flash when an error occurs if enabled.	00
F12	µA Lower Limit	00=10 µA 01=5µA	See page 4-7 for more information on µA settings.	00
F13	µA Upper Limit	00=50 µA 01=100 µA	See page 4-7 for more information on µA settings.	00
F14	Total Hours	00=Gun Total Hours 01=Pump Total Hours	View total hours the pump and gun have been used. View only.	00
F15	Save/Restore/Reset	00=System Save 01=System Restore 02=Factory Reset	Save new settings, restore to previously saved settings, or return to factory settings.	00
F16	Gun Display Brightness	00=Low 01=Medium 02=Maximum	Sets brightness for gun display.	01
F17	Number of Presets	01–20 Presets	Choose from 1 to 20 presets. See page 4-5 for more information.	20

Continued...

Function Number	Function Name	Function Values	Description	Default HDLV Mode (Encore HD)
F18	Pump Type	00=Venturi 01=HDLV 02=COD	Customize for the pump type being used. Must be programmed during initial setup.	01 or 02
F19	Control Type	00=Local 01=External	Customize for local or external/remote control. Must be programmed during initial setup.	00
F20	Gun Number	1–4	Set number of guns being used. Must be programmed during initial setup.	00
F21	Maintenance Timer, Pump	00=View Timer 01=Set Timer (000=Disable through 999) 02=Reset (00, 01)	Sets a timer for when pump maintenance is due. 00 is view only. 01 allows you to choose 000 to disable the timer, or choose from 1 to 999 days. 02 resets the timer to 00.	00
F22	Purge	00=Disable 01=Single 02=Dual 03=Remote	Sets desired purge functionality. See page 4-18 for more information.	01
F23	Reserved	Reserved		0
F24	Reserved	Reserved		0
F25	Pattern Air Delay	0.00 – 5.00 Seconds in 0.25 Increments	Sets the number of seconds the pattern air continues to operate after the gun trigger is released. Choose from 0 to 5 seconds in 0.25 increments.	0.00

Continued...

Function Number	Function Name	Function Values	Description	Default HDLV Mode (Encore HD)
F26	Soft Siphon	1–10 Seconds in 0.25 Increments	Sets the number of seconds that assist air is directed through the pump and siphon tubing back to the powder supply (Soft Siphon), then through the pump and delivery tubing to the spray gun (Soft Gun). This clears the pump, powder tubing, and gun of powder.	8.00
F27	Soft Gun	1–10 Seconds in 0.25 Increments	Sets the number of seconds that assist air is directed through the pump and siphon tubing back to the powder supply (Soft Siphon), then through the pump and delivery tubing to the spray gun (Soft Gun). This clears the pump, powder tubing, and gun of powder.	8.00
F28	Pulse ON	0.1–0.95 Seconds in 0.05 Increments	Pulse On sets duration of each pulse. Pulse Off sets time between pulses. See F30–F31, below.	0.50
F29	Pulse OFF	0.1–0.95 Seconds in 0.05 Increments		1.50
F30	Siphon Pulses	1–99	Purge air is directed in pulses from the pump to the powder supply (Siphon Pulses), then from the pump to the spray gun (Gun Pulses).	7
F31	Gun Pulses	1–99		13
F32	Powder Pre–Load	1–99	The new color powder is pumped to the spray gun for the set time at 100% of flow to load the system for production.	4

Continued...

Function Number	Function Name	Function Values	Description	Default HDLV Mode (Encore HD)
F33	Manifold Purge	0–10 Seconds in 0.25 Increments	The dump valve opens and the pump speeds up to 100% of flow to pump the remaining powder out of the manifolds.	2.00
F34	Conveyance Air Constant A	3.500 to 4.500	The calibration constant should match the numbers on the calibration sticker found on the back of the corresponding manifold. Use default values only if the sticker is damaged.	4.000
F35	Conveyance Air Constant C	–0.500 to +0.500		0
F36	Pattern Air Constant A	1.500 to 4.500		4.000
F37	Pattern Air Constant C	–0.500 to +0.500		0

Saving and Loading Preset and Function Settings

To save the current preset and function settings, set F15 to F15–00 and press **Enter**. All current preset and function settings are saved to memory.

To restore the saved preset and function settings, set F15 to F15–01 and press **Enter**. All the previously saved preset and function settings will be restored from memory.

To restore the system to the factory defaults, set F15 to F15–02, then press **Enter**.

Setting the Number of Presets

Custom Function F17 allows the user to set the number of valid presets between 1 and 20. For example, if the function is set to F17–05, then only 5 presets can be set up and toggled between on the interface and gun.

NOTE: If you configure F19=01 External (Robot Gateway), then there are only 10 presets.

NOTE: If the function is set to F17–01, then only 1 preset will be available for use.

HD System Shutdown

For HD systems, complete the following steps:

NOTE: Always remove the pickup tube from the powder source and place into an appropriate collector before pressing the color change button.

NOTE: Before starting the purge cycle, make sure the guns are aimed into the booth.

1. For HD systems, press the **Color Change** button to start cleaning the system of residual powder.
2. Purge the spray gun by pressing the **Purge** button on back of spray gun until no more powder is blown from the gun.
3. Press the **Standby** button to turn off the spray gun and interface.
4. Turn off the system air supply and relieve the system air pressure at the pump cabinet.
5. If shutting down for the night or a longer period of time, shut off system power.
6. Perform the *Maintenance* procedures on page 4-27.

XT System Shutdown

For XT systems, complete the following steps:

NOTE: Before starting the purge cycle, make sure the guns are aimed into the booth.

1. Purge the spray gun by pressing the **Purge** button until no more powder is blown from the gun.
2. Press the **Standby** button to turn off the spray gun and interface.
3. Turn off the system air supply and relieve the system air pressure.
4. If shutting down for the night or a longer period of time, move the power unit switch to the OFF position to shut off system power.
5. Perform the *Maintenance* procedures on page 4-27.

Maintenance

WARNING: Allow only qualified personnel to perform the following tasks. Follow the safety instructions in this document and all other related documentation.

WARNING: Before performing the following tasks, turn off the controller and disconnect system power. Relieve system air pressure and disconnect the system from its input air supply. Failure to observe this warning may result in personal injury.

Daily maintenance for the controller should include blowing off the interface module with a blow gun. Wipe any residual powder off the controller with a clean cloth.

Periodically check all system ground connections.

Section 5
Troubleshooting

WARNING: Allow only qualified personnel to perform the following tasks. Follow the safety instructions in this document and all other related documentation.

WARNING: Before making repairs to the controller or spray gun, shut off system power and disconnect the power cord. Shut off the compressed air supply to the system and relieve the system pressure. Failure to observe this warning could result in personal injury.

These troubleshooting procedures cover only the most common problems. If you cannot solve a problem with the information given here, contact Nordson technical support at (800) 433–9319 or your local Nordson representative for help.

Help Code Troubleshooting

The Help icon in the Function/Help display lights if a problem occurs that the controller can sense.

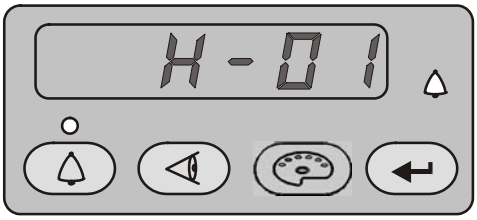

Figure 5-1 Displaying and Clearing Help Codes

Viewing Help Codes

Press the **Help** button to display the Help codes. The controller retains the last 5 codes in memory. Rotate the knob to scroll through the codes. The display will blank if there is no activity for 5 seconds.

Clearing Help Codes

To clear the help codes, press the **Help** button, then scroll through them until **CLR** is displayed, then press enter. The Help icon will stay lit until the controller clears the codes.

Help Code Troubleshooting Chart

Code	Message	Correction
H00	No Gun Number	Gun cannot be set to 0, must be a number from 1–4. Refer to the *Startup* section on page 4-2 for more information on setting up gun numbers.
H01	EEPROM Read Failed	Reset the fault (press the Nordson key to open the fault screen). This fault will sometimes occur when the software is upgraded.
H07	Gun Open	Trigger the gun and check the display. If the µA feedback is 0, check for a loose gun cable connection at the gun receptacle. Check for a loose connection to the power supply inside the gun. Perform *Gun Cable Continuity Tests* as described in the spray gun manual. If the cable and the connections are okay, check the spray gun high voltage power supply.
H10	Gun Output Stuck Low	With the gun triggered on and the kV set to maximum, use a multimeter set for VRMS to check for voltage between J4 pins 1 and 2 on the main control board. If no voltage is present replace the main control board.
H11	Gun Output Stuck High	Make sure kV is set to 0 and the gun is triggered OFF. The µA display should read 0. If the µA display is greater than 0, replace the main control board. Make sure the trigger icon on the interface is not lit.
H12	Communications Fault CAN Bus	Check that the gun number is set correctly. See F20 in the *Controller Configuration* section on page 4-20. Check the DIP switch setting on the pump controller. Check the interface interconnect cable. Make sure the cable connections are secure and the cable is not damaged. Refer to *Gun Cable Continuity Tests* in your spray gun manual. Check the connections from the cable receptacle to the J1 terminal block on the main control board. If all connections are secure but the fault persists replace the cable. Route the network cable away from sources of electrostatics (hopper, gun cables, powder hose). Verify proper grounding. Verify network terminations are set correctly for non-standard systems.
H15	Over Current Fault (Cable or Gun Short)	This fault can occur if the gun tip touches a grounded part while spraying. This fault turns the electrostatic output off. Release the trigger to reset the fault and resume spraying. If the fault reoccurs, disconnect the spray gun high voltage power supply from the gun cable inside the gun (J2) and trigger the gun on. Refer to the *Power Supply Replacement* procedure in the spray gun manual. If the H15 code does not reappear, then check the high voltage power supply for issues. If the help code reappears, check the gun cable continuity and replace it if shorted. Perform *Gun Cable Continuity Tests* as described in your spray gun manual.
H19	Gun Maintenance Timer Expired	The Maintenance Timer has exceeded its setting. Perform the scheduled maintenance, then reset the maintenance timer. See F07 in the *Controller Configuration* section on page 4-20 for reset instructions (F07-02).

Continued...

H20	Pump Maintenance Timer Expired	The Pump Maintenance Timer has exceeded its setting. Perform the scheduled maintenance, then reset the maintenance timer. See F21 in the *Controller Configuration* section on page 4-20 for reset instructions (F21-02).
H21	Pattern Air Valve Fault	Refer to the controller wiring diagrams in the pump control unit manual. Check the wiring harness connection (J8) to the proportional valve solenoid. Check the solenoid operation. Replace the valve if the solenoid is not working.
H22	Conveyance Air Valve Fault	Refer to the controller wiring diagrams in the pump control unit manual. Check the wiring harness connection (J7) to the proportional valve solenoid. Check the solenoid operation. Replace the valve if the solenoid is not working.
H23 (HD)	Conveyance Air Flow Low Fault Flow is lower than setpoint. System cannot reach setpoint.	Check if input pressure is greater than 87 psi (5.9 bar). Make sure and correct H49 or H50 faults if present. Check for blocked powder delivery line to spray gun. Check for blocked powder tubes. Check if internal regulator is set to 85 psi (5.7 bar) with gun triggered ON. Check for blockage in proportional valve. Check for oil/water contamination. Perform the *Conveyance Air Flow Verification for HD* procedure on page 5-13. Check for water and/or oil contamination in the transducer filters by removing the board from the flow manifold. Replace filters with 1604436.
H23 (XT)	Flow Air Flow Low Fault	The flow setting may be too high for the system to achieve. Maximum air flow is dependent on factors including air tubing length, diameter, and pump type. Switch to Classic Flow mode. This mode lets you set and view actual flow-rate and atomizing air flow so you can diagnose the problem. Check the tubing from the iFlow module to the powder pump for kinks or blockage. Make sure the check valves are not blocked. Disconnect the air tubing at the pump, clear the help codes, and trigger the gun. If the help code does not reappear, clean or replace the pump venturi nozzle or throat. Check the system air supply pressure. Input pressure must be above 87 psi (5.9 bar). Check the system filter and the tubing from the filter to the power unit for kinks or blockage. Refer to the *Repair* section in the *Encore XT Manual Powder Spray Systems* manual for procedures using the iFlow Air Flow Verification Kit (1039881) to check the operation of the iFlow module proportional valves and the output of the precision air pressure regulator.

Continued...

H24 (HD)	Pattern Air Flow Low Fault	Check if input pressure is greater than 87 psi (5.9 bar). Check for blocked airline to spray gun. Check if internal regulator is set to 85 psi (5.7 bar) with gun triggered ON. Check for blockage in proportional valve. Check for oil/water contamination. Use the flow verification tool (1039881) with its instructions and connect to the pattern air output. Check for water and/or oil contamination in the transducer filters by removing the board from the flow manifold. Replace filters with 1604436.
H24 (XT)	Atomizing Air Flow Low Fault	See H23 (XT).
H25 (HD)	Conveyance Air Flow High Fault Flow is higher than setpoint. System unable to turn it down.	Check if input pressure is less than 110 psi (7.6 bar). Check if internal regulator is set to 85 psi (5.7 bar) with the spray gun triggered ON. Check for contamination in the proportional valve. Check for oil/water contamination. Trigger the spray gun OFF and reset the fault. If the fault returns without triggering the spray gun ON, remove the 8 mm tube plug from the pump control unit labeled flow. Check that no air is leaking from the port. If air is leaking, remove the proportional valve and clean it. If air is not leaking, plug the 8 mm port and perform the *Re-Zero Procedure* on page 5-13. Perform the *Conveyance Air Flow Verification for HD* procedure on page 5-13. Check for water and/or oil contamination in the transducer filters by removing the board from the flow manifold. Replace filters with 1604436.

Continued...

H25 (XT)	Flow Air Flow High Fault	Switch to Classic Flow mode. This mode lets you set and view actual flow and atomizing air so you can diagnose the problem. If the spray gun is triggered off when the help code appears, disconnect the air tubing from the appropriate air output fitting and plug the fitting. Clear the help codes. If the code does not reappear then the proportional valve is stuck open. Refer to the *Repair* in the pump control unit manual for cleaning instructions. If the spray gun is triggered on when the help code appears, disconnect the air tubing from the appropriate output fitting and set the flow to zero. If air is still flowing from the fitting then plug the fitting and clear the help codes. If the code does not reoccur then the proportional valve is stuck open. Refer to the *Repair* section in the pump control unit manual for cleaning instructions. If the help code re-occurs and the controller interface is showing air flow, then check for leaks around the proportional valves or transducers on the iFlow module. If the help code persists, re-zero the module as described on page 5-13. Refer to the *Repair* section in the *Encore XT Manual Powder Spray Systems* manual for procedures using the iFlow Air Flow Verification Kit to check the operation of the iFlow module proportional valves and the output of the precision air pressure regulator.
H26 (HD)	Pattern Air Flow High Fault	Check if input pressure is less than 110 psi (7.6 bar). Check if the internal regulator is set to 85 psi (5.7 bar) with the spray gun triggered ON. Check for contamination in the proportional valve. Check for oil/water contamination. Trigger the spray gun OFF and reset the fault. If the fault returns without triggering the spray gun ON, remove the 6 mm blue tubing and check for air leaks. Make sure the system controller is triggered OFF. Check that no air is leaking from the port of the pump control unit. If air is leaking, remove the proportional valve and clean it. If air is not leaking, plug the 6 mm pattern port and perform the *Re-Zero Procedure* on page 5-13. Perform the *Conveyance Air Flow Verification for HD* procedure on page 5-13. Check for water and/or oil contamination in the transducer filters by removing the board from the flow manifold. Replace filters with 1604436.
H26 (XT)	Atomizing Air Flow High Fault	See H25 (XT)

Continued...

H27	Trigger On during Power Up Fault	This code appears if the gun was triggered ON when the interface was turned on. Turn off the interface, wait for several seconds, then turn the interface back on, making sure the spray gun is not triggered on. If the fault reoccurs, check for a bad trigger switch.
H28	EEPROM Data Version Changed	Software version has been changed. This code appears after a software update. Clear the fault. It should not reappear.
H29	System Configuration Mismatch	Main gun control and pump configurations do not match. One is venturi and the other is HDLV/COD. See F18 in the *Controller Configuration* section on page 4-20 and confirm settings.
H30	Calibration Invalid	Pump calibration values for A or C are out of range. Refer to your pump control unit manual for more information.
H31	Boost Valve Fault	Check J6 wiring diagram pump board.
H32	Electrode Airwash Fault	Check J4 wiring diagram pump board.
H33	Fluidizing Air Valve Fault	Check J5 wiring diagram pump board.
H34	Purge Air Valve Fault	Check J10 wiring diagram pump board.
H35	Vibratory Motor Relay Fault	Check J9 wiring diagram pump board.
H36	LIN BUS Communication Fault (Gun Cable)	Perform *Gun Cable Continuity Tests* in the spray gun manual, to check J3 connection. If an open or short is found, replace the cable. If the gun cable is okay, replace the gun display module.
H41	24V Fault	Check the DC power supply located in the pump control unit. If the voltage is less than 22 Vdc replace the power supply in the pump control unit. Turn on the pump control unit for this test.
H42	Main Board Fault (Interface)	Clear the fault and make sure kV is set to maximum 100 kV, then trigger the gun ON. If the code re-appears, check for a defective gun power supply or a gun cable. If the cable and the gun power supply are OK, replace the main board.
H43	µA Feedback Fault	Make sure kV is set to maximum 100 kV, trigger the gun ON and check the µA display. If the µA display always reads >75 µA, even when the gun is more than 3 ft from a grounded surface, check the gun cable or the gun high voltage power supply. If the µA display reads 0 with the gun triggered on and close to a part, check the gun cable or the gun high voltage power supply. When the gun is triggered on and kV is set >0, the µA display should always read >0.
H44	Robot Heartbeat Missing	System controller is configured for External Mode, and cannot detect the Prodigy PLC Gateway heartbeat. Check CAN cable. Make sure Gateway is configured properly. Refer to the Prodigy PLC Gateway manual.

Continued...

H45	Pinch Valve 1 Fault	Check J11–1 for loose harness connection. Check Valve 1 for loose connection.
H46	Pinch Valve 2 Fault	Check J11-2 for loose harness connection. Check Valve 2 for loose connection.
H47	Pinch Valve 5 Fault	Check J11-5 for loose harness connection. Check Valve 5 for loose connection.
H48	Pinch Valve 6 Fault	Check J11-6 for loose harness connection. Check Valve 6 for loose connection.
H49	Delivery Tube A Valve 3 Fault	Check J11-3 for loose harness connection. Check Valve 3 for loose connection.
H50	Delivery Tube B Valve 4 Fault	Check J11-4 for loose harness connection. Check Valve 4 for loose connection.
H51	Vacuum Valve 7 Fault	Check J11-7 for loose harness connection. Check Valve 7 for loose connection.
H52	Purge Valve 9 Fault	Check J12-3 for loose harness connection. Check Valve 9 for loose connection.
H53	Purge Pinch Pressure Select Valve 8 Fault	Check J12-2 for loose harness connection. Check Valve 8 for loose connection.

General Troubleshooting Chart

Problem	Possible Cause	Corrective Action
1. Uneven pattern	Blockage in spray gun	1. Purge the spray gun. Remove the nozzle and electrode assembly and clean them. 2. Disconnect the powder feed hose from the spray gun and blow out the gun with an air gun. 3. Disassemble the spray gun. Remove the inlet and outlet tubes and elbow and clean them. Replace components as necessary.
	Nozzle, deflector, or electrode assembly worn, affecting pattern	Remove, clean, and inspect the nozzle, deflector, and electrode assembly. Replace worn parts as necessary. If excessive wear or impact fusion is a problem, reduce the flow rate and pattern air flow.
	Damp powder	Check the powder supply, air filters, and dryer. Replace the powder supply if contaminated.
	Low pattern air pressure	Increase the pattern air.
	Improper fluidization of powder in hopper	Increase the fluidizing air pressure. If the problem persists, remove the powder from the hopper. Clean or replace the fluidizing plate if contaminated.
	iFlow module out of calibration	Perform the Re-Zero Procedure on page 5-13.
2. Voids in powder pattern	Worn nozzle or deflector	Remove and inspect the nozzle or deflector. Replace worn parts.
	Plugged electrode assembly or powder path	Remove the electrode assembly and clean it. Remove powder path if necessary and clean it.
	Electrode air wash flow too high	Adjust the needle valve at the power unit to decrease the electrode air wash flow.
3. Low powder flow or powder flow surging	Assist air to high/low	Adjust assist air as needed. Refer to vacuum measurement troubleshooting in the pump control unit manual.
	Fluidizing to high/low	
	Air tubing kinked or plugged (H24 or H25)	Check pattern air tubing for kinks.
	Fluidizing air too high	If fluidizing air is set too high the ratio of powder to air will be be too low.

Continued...

Problem	Possible Cause	Corrective Action
	Fluidizing air too low	If fluidizing air is set too low the pump will not operate at peak efficiency.
	Powder hose plugged	Perform color change
	Powder hose kinked	Checked for a kinked powder hose.
	Gun powder path plugged	Check powder inlet tube, elbow, and electrode support for impact fusion or debris. Clean as necessary with compressed air.
	Pick-up tube blocked	Check for debris or bag (VBF units) blocking pick-up tube.
	Vibratory box feeder disabled (VBF units only)	Set the Custom Function F01 for a box feeder (F01–01). See the *Controller Configuration* section on page 4-20.
	Low supply air pressure	Input air must be greater than 5.86 bar (85 psi).
	Air pressure regulator set too low	Adjust the input regulator so that the pressure is greater than 5.86 bar (85 psi).
	Supply air filter plugged or filter bowl full – water contamination of flow controller	Remove bowl and drain water/dirt. Replace filter element if necessary. Clean system, replace components if necessary.
	Flow valve plugged (H24 or H25)	Refer to *Proportional Valve Cleaning* in the pump control unit manual.

Continued...

Problem	Possible Cause	Corrective Action
4. Loss of wrap, poor transfer efficiency	**NOTE:** Before checking possible causes, check the help code on the system controller and perform the corrective actions recommended in this section.	
	Low electrostatic voltage	Increase the electrostatic voltage.
	Poor electrode connection	Remove the nozzle and electrode assembly. Clean the electrode and check for carbon tracking or damage. Check the electrode resistance. If the electrode assembly is good, remove the gun power supply and check its resistance. Refer to your spray gun product manual for instructions.
	Poorly grounded parts	Check the conveyor chain, rollers, and part hangers for powder buildup. The resistance between the parts and ground must be 1 megohm or less. For best results, 500 ohms or less is recommended.
5. No kV output from the spray gun (display shows 0 kV when gun triggered), but powder is spraying	**NOTE:** Before checking possible causes, check the help code on the controller and perform the corrective actions recommended in this section.	
	Damaged gun cable	Perform the *Gun Cable Continuity Checks* as described in your spray gun manual. If an open or short is found, replace the cable.
	Spray gun power supply shorted	Perform the *Power Supply Resistance Test* as described in the pump control unit manual.
6. Powder build up on the electrode tip	Insufficient electrode air wash flow	Adjust the electrode air wash needle valve on the pump control panel to increase the electrode air wash flow.
7. No kV output from the spray gun (display shows voltage or μA output), but powder is spraying	**NOTE:** Before checking possible causes, check the help code on the controller and perform the corrective actions recommended in this section.	
	Spray gun power supply open	Perform the *Power Supply Resistance Test* as described in your spray gun manual.
	Damaged gun cable	Perform the *Gun Cable Continuity Test* as described in your spray gun manual. If an open or short is found, replace the cable.

Continued...

Problem	Possible Cause	Corrective Action
8. No kV output and no powder output	Malfunctioning trigger switch, display module, or cable	Check the *Gun Triggered ON* icon at the top center of the controller interface. If the icon is not lit, check for a H36 help code. Check the trigger switch connections to the display module, replace the switch if necessary. Perform the *Gun Cable Continuity Test* as described in your spray gun manual. **NOTE:** It may be possible to use the settings trigger as the spray trigger until repairs are made. Set Function F08 to F08–05. Refer to the *Controller Configuration* section on page 4-20 for more information.
9. No purge air when Purge button is pressed	Malfunctioning spray gun display module, gun cable, or iFlow module purge solenoid valve; no air pressure, or kinked air tubing	If display module does not show *PU* when *Purge* button is pressed, then module membrane switch is defective. Replace display module. If display module shows PU: Check the purge air tubing and solenoid valve on the iFlow manifold. Perform the *Gun Cable Continuity Test* as described in your spray gun manual.
10. Gun display module shows CF	Loose gun display connection	Refer to the system controller manual. Check connector J3 (cable/display module) inside the gun. Check for loose or bent pins.
	Defective gun cable or gun display module (H36 code)	Perform the *Gun Cable Continuity Test* as described in your spray gun manual. Replace cable if damaged. Replace gun display module if cables and connections are good.
11. Preset cannot be changed from the spray gun	Settings trigger disabled	Check Custom Function F08 and set to enabled (F08–00). Check F05 (lockout) function settings. Refer to the *Controller Configuration* section on page 4-20 for more information.
	No programmed preset available	Presets with no set values for flow rate and electrostatics are automatically skipped.
	Loose or defective trigger switch	Check for a loose trigger switch connection. The trigger switch is plugged into the gun display module.

Continued...

Problem	Possible Cause	Corrective Action
12. Powder flow cannot be changed from the spray gun	Settings trigger disabled	Check Custom Function F08 and set to enabled (F08–00). Check F05 (lockout) function settings. Refer to the *Controller Configuration* section on page 4-20 for more information.
	Loose or defective trigger switch	Refer to spray gun manual. Check for a loose trigger switch connection. The trigger switch is plugged into the gun display module.
13. VBF doesn't turn ON and Off with the gun trigger	VBF turned off	Set the Custom Function F01 for a box feeder (F01–01). Refer to the *Controller Configuration* section on page 4-20 for more information. Check for loose cable on pump control unit.
14. Fluidizing Air is on all the time even when the gun is triggered Off	System is setup for a hopper	Set the Custom Function F01 for a box feeder (F01–01). Refer to the *Controller Configuration* section on page 4-20 for more information.
15. No kV when gun is triggered ON, powder flow OK	kV set to zero	Set kV to a non-zero value.
	Check for Help Codes and follow the procedures	
16. No powder flow when gun is triggered ON, kV OK	Powder flow set to zero	Change powder flow to a non-zero number.
	Input air turned OFF	Check the gauge on the filter regulator and make sure the air is turned ON.
	Check for Help Codes and follow the procedures	

Re-Zero Procedure

Perform this procedure if the system controller interface indicates air flow when the spray gun is not triggered on, or if a Flow Air or Pattern Air Flow High Help code (H25 or H26) appears.

Before performing a re-zero procedure:

- Make sure the air pressure being supplied to the system is higher than the minimum 5.86 bar (85 psi).
- Make sure no air is leaking through the module output fittings or from around the solenoid valves or proportional valves. Re-zeroing modules with leaks will result in additional errors.

1. At the pump control panel, disconnect the 6 mm pattern air tubing and install 8 mm plugs in the output fittings.
2. Press the **Nordson** button for 5 seconds to display the controller functions. F00–00 is displayed.
3. Rotate the knob until F10–00 is displayed.
4. Press the **Enter** button, then rotate the knob to display F10–01.
5. Press the **Enter** button. The system controller will re-zero the flow and pattern air and reset the function display to F10–00.
6. Remove the plugs from the pattern air output fittings and reconnect the air tubing.

Conveyance Air Flow Verification for HD

NOTE: Perform a color change and verify that all powder is removed from the pump before starting this procedure.

1. Use the flow verification tool (1039881) and connect to the delivery port of the pump with 10 ft of 8 mm tubing.
2. Set the delivery to 100% and set assist air to 00% and trigger the pump ON. The monometer should read 4.0–5.0 psi (0.2–0.3 bar).
3. Increase the assist air to +50% and trigger the pump ON. The monometer should read 7.0–8.0 psi (0.5–0.6 bar).
4. Decrease the assist air to –50% and trigger the pump ON. The monometer should read 1.0–3.0 psi (0.1–0.2 bar).

Controller Interconnect Cable Test

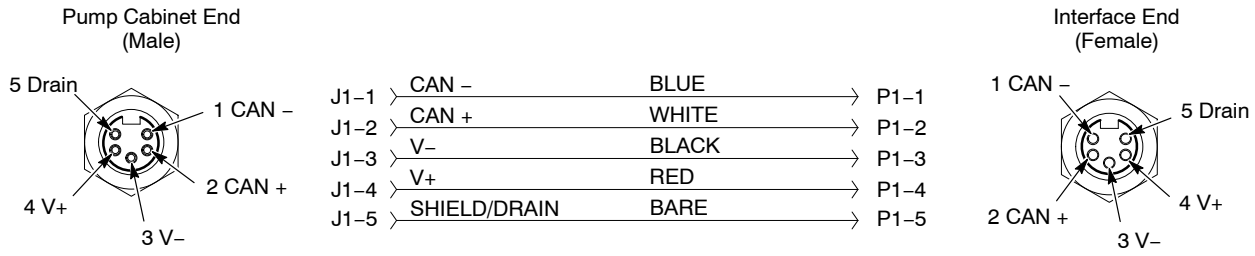

Figure 5-2 Controller Interconnect Cable Wiring

Wiring Diagram

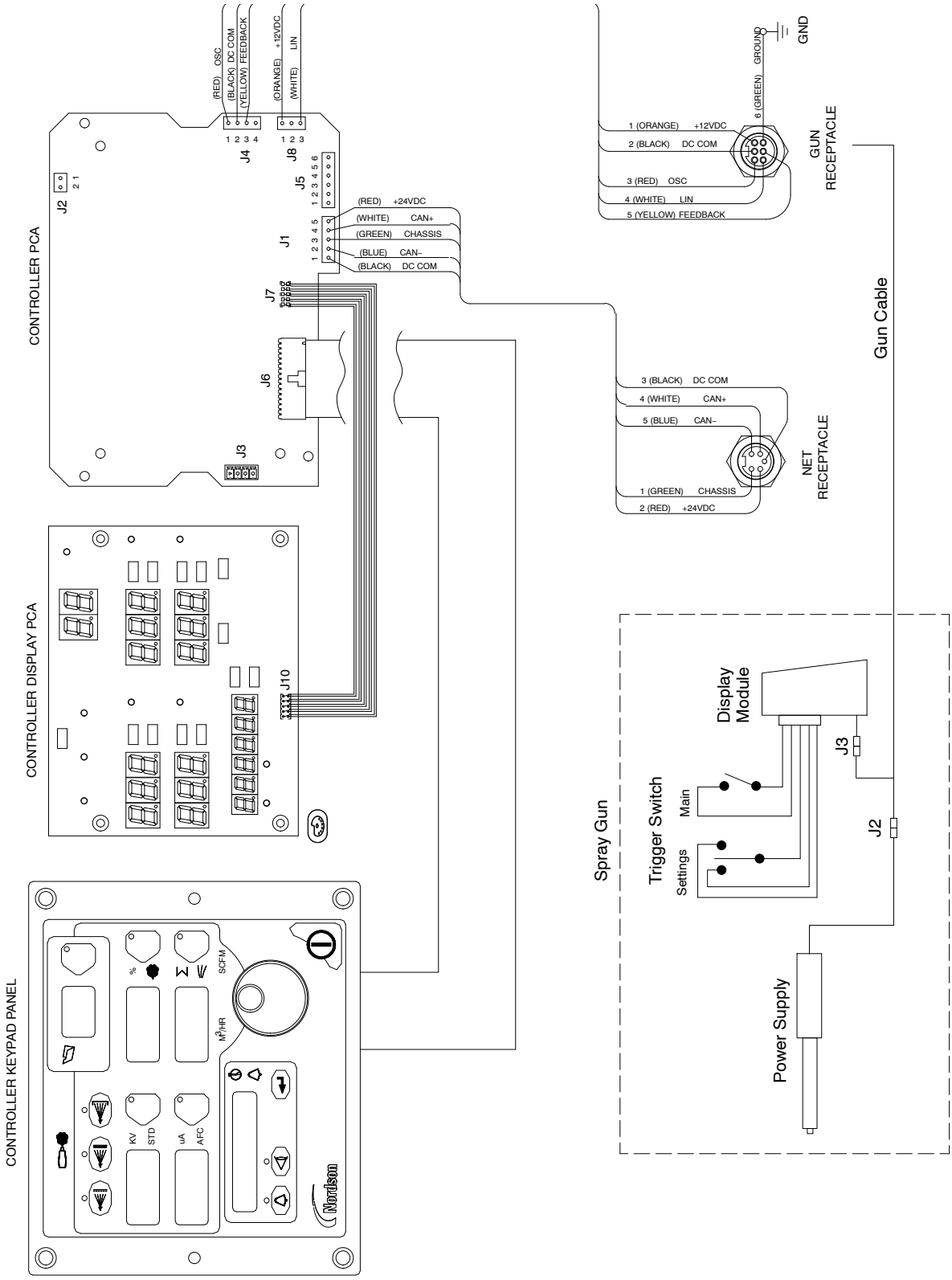

Figure 5-3 Controller Interface Wiring Diagram

Section 6
Repair

WARNING: Allow only qualified personnel to perform the following tasks. Follow the safety instructions in this document and all other related documentation.

Interface Module Repair

WARNING: Shut off the controller and disconnect the power cord or disconnect and lock out power at a breaker or disconnect ahead of the controller before opening the controller enclosures. Failure to observe this warning could result in a severe electrical shock and personal injury.

CAUTION: Electrostatic sensitive device. To avoid damaging the controller circuit boards, wear a grounding wrist strap and use proper grounding techniques when making repairs.

See Figure 6-1 for a view of the interface module assembly and repair parts.

Refer to *Section 5, Troubleshooting*, for the interface electrical schematic and harness connections. Refer to *Section 7, Parts* for repair kits.

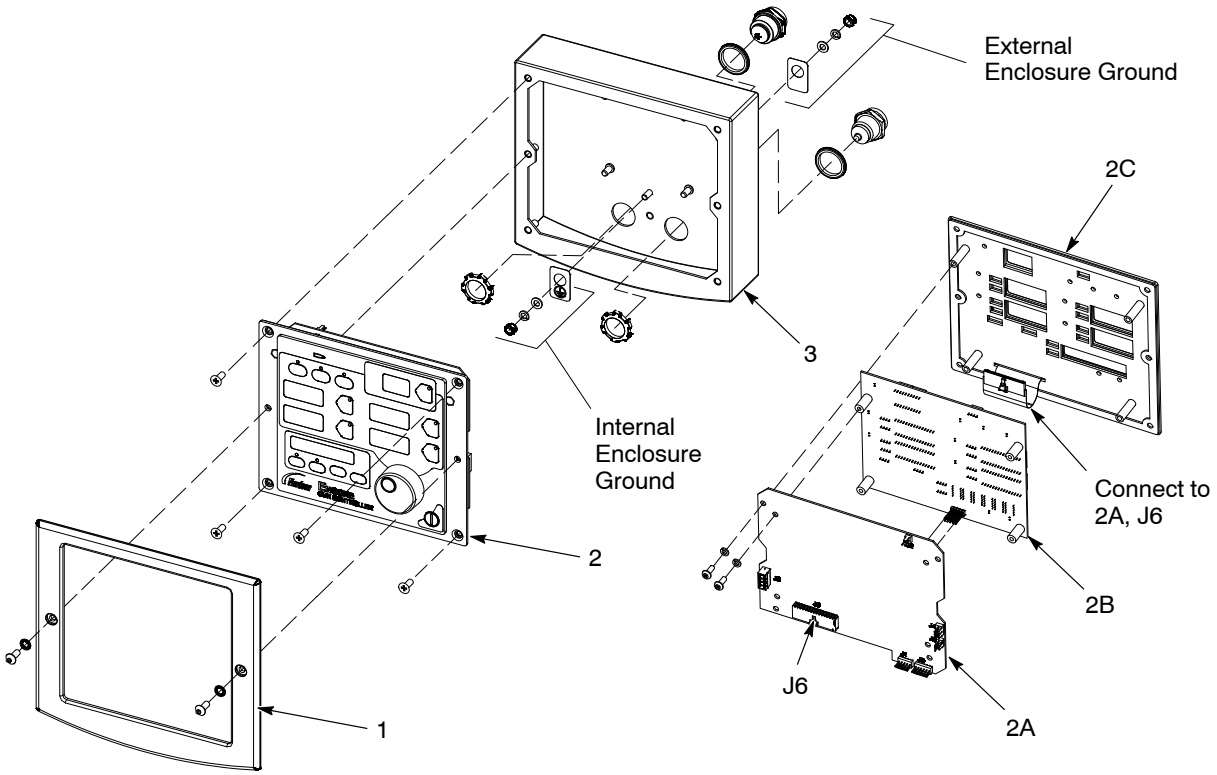

Figure 6-1 Interface Module Assembly

1. Bezel
2. Keypad/PCB Assembly

2A. Main Control Board
2B. Main Display Board

2C. Keypad Panel
3. Enclosure

Section 7
Parts

Introduction

To order parts, call the Nordson Industrial Coating Systems Customer Support Center at (800) 433-9319 or contact your local Nordson representative.

This section covers components, parts and options for the Encore HD and XT system controller.

Refer to the following manuals for additional information and optional equipment.

Encore HD Mobile Powder Spray System: 1605707
Encore HD Manual System Spray Gun: 1604869
Encore HD Pump Control Unit and Power Supply: 1606783
Encore XT Manual Powder Spray Systems: 1603227
ColorMax 2 Powder Coating System w/ Encore Feed Center: 1605397
Prodigy to Encore HD Upgrade Kit Instruction Sheet: 1604780
Encore HD Manual System with Pump Cabinet: 1612632
Encore HD Color–on–Demand System: 1612313
Encore HD Pump: 1605078

Some system manuals are not listed. All manuals can be downloaded from:
http://emanuals.nordson.com/finishing/
(click on Powder–US, then navigate to appropriate system manual)

Controller Parts

Controller Exploded View

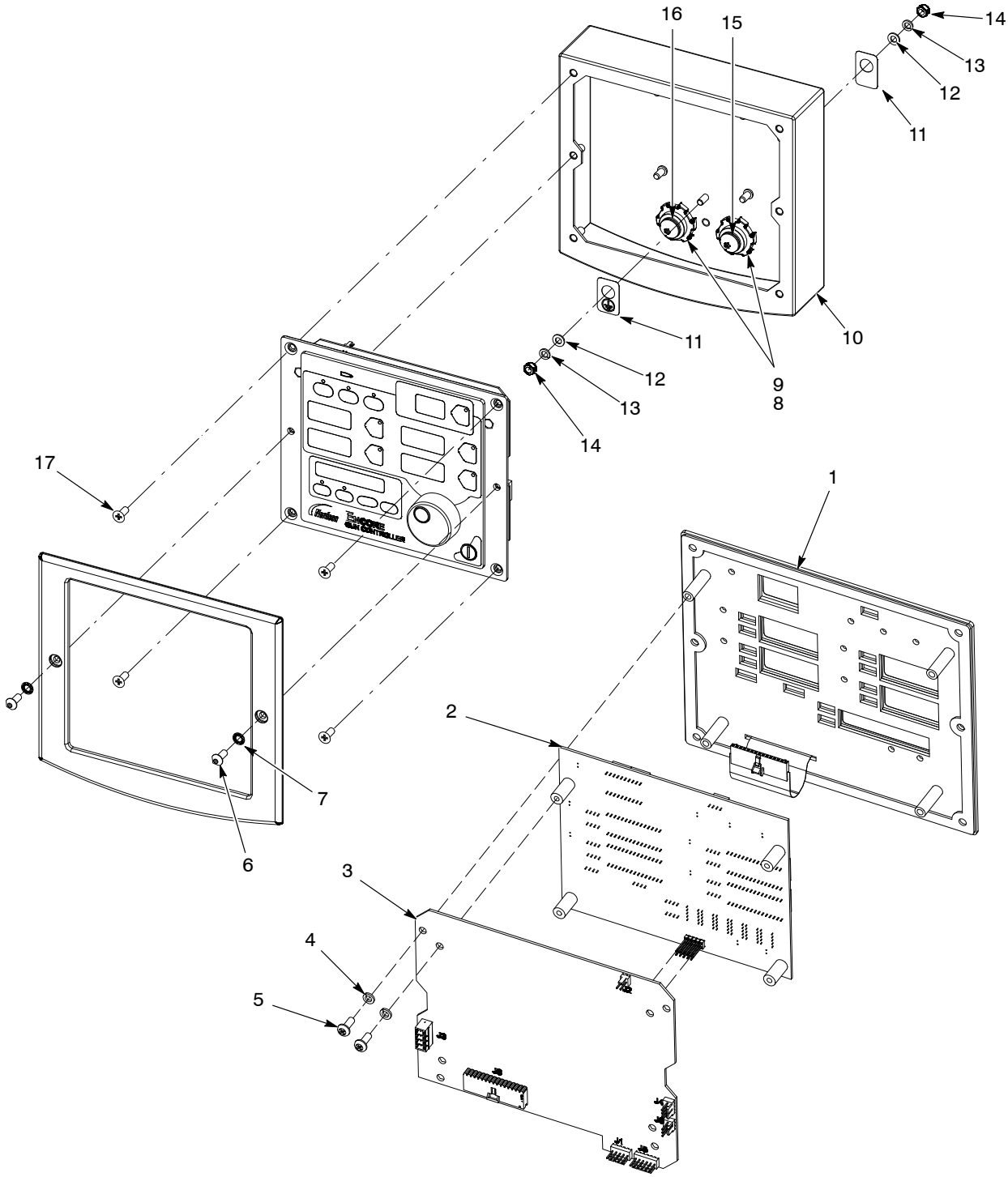

Figure 7-1 Controller Parts

Controller Parts List

Refer to Figure 7-1.

Item	Part	Description	Quantity	Note
–	1604125	CONTROL UNIT, interface, Encore HD/XT	1	
1	1604855	• PANEL, keypad, Encore HD controller	1	
2	1085084	• PCA, main controller display, Encore HD	1	B
3	1601341	• PCA, main control, Encore HD	1	B
4	983403	• WASHER, lock, split, M4, steel, zinc	8	
5	982308	• SCREW, pan head, recessed, M4 x 10, zinc	8	
6	982636	• SCREW, button, socket, M5 x 12, zinc	2	
7	983127	• WASHER, lock, internal, M5, zinc	2	
8	984526	• NUT, lock, $^1/_2$ in. conduit	2	
9	939122	• SEAL, conduit fitting, $^1/_2$ in., blue	2	
10	1082734	• ENCLOSURE, controller interface, Encore HD	1	
11	240674	• TAG, ground	2	
12	983021	• WASHER, flat, 0.203 x 0,406 x 0.040, brass	2	
13	983401	• WASHER, lock, split, M5, steel, zinc	2	
14	984702	• NUT, hex, m5, brass	2	
15	1082759	• RECEPTACLE, net, controller interface, Encore HD	1	A
16	1082709	• RECEPTACLE, gun, Encore HD	1	A
17	982286	• SCREW, flat, slotted, M5 x 10, zinc	4	

NOTE A: Receptacles include harnesses.
B: Items 2 and 3 are sold together as kit 1604025.

Rail Mount Exploded View

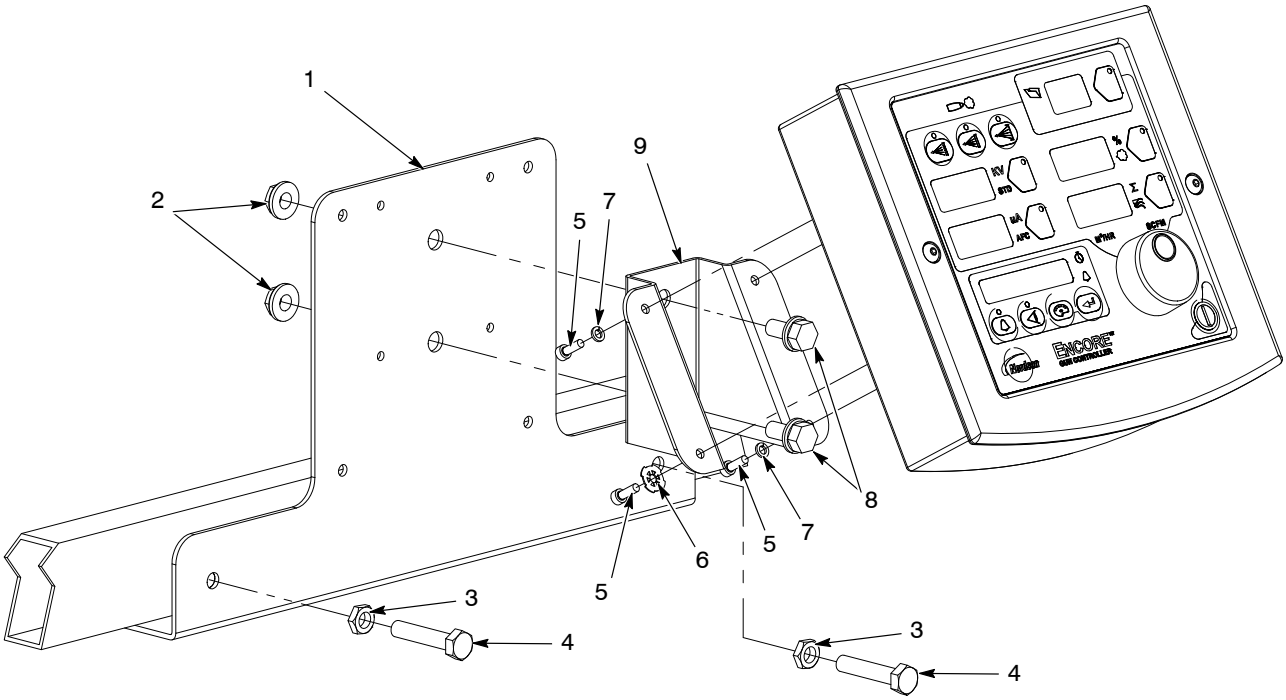

Figure 7-2 Rail Mount System Parts

Rail Mount Parts List

Refer to Figure 7-2.

Item	Part	Description	Quantity	Note
1	1604881	BRACKET, controller rail mount	1	
2	336281	NUT, hex, serrated, 0.5/16 – 18	2	
3	1091006	NUT, hex, flanged, serrated, M8	2	
4	1103115	SCREW, hex, serrated, M8 x 16mm, zinc	2	
5	982448	SCREW, skt, cap, M4 x 12mm	4	
6	1084121	WASHER, lock, dished #8	1	
7	983403	WASHER, lock, M4	3	
8	981346	SCREW, hex, 0.5/16 – 8 x 2.500	2	
9	1082732	BRACKET, universal mount	1	

MATERIAL NO. 1084547 REVISION 19

ZONE	REV	DESCRIPTION	BY	CHK	RELEASE NO.	DATE
	A00	00) PRELIMINARY.	DRJ			11JAN08
	A01	01) RELEASED FOR PRODUCTION.	DRJ	RJF	PE600468	14JAN08
	A02	02) ADDED ZONES 21 & 22, & MOBILE SYSTEM SPECS.	DRJ	RJF	PE600575	01FEB08
	A03	03) ADDED 6M CABLE EXTENSION (SHEET 1); ADDED	DC	DY	PE600552	21FEB08
		MOBILE SYSTEM WITH 25-LB. HOPPER (SHEET 2).				
	A04	04) REDRAWN IN CURRENT FORMAT; ADDED ATEX-	DC	RJF	PE600806	30MAY08
		APPROVED VERSIONS OF INTERFACE CONTROL UNIT,				
		HANDGUN, 115V & 220V VBF SYSTEMS, AND 50- AND				
		25-LB HOPPER SYSTEMS; REDESIGNED APPROVED				
		EQUIPMENT SPECIFICATIONS TABLES (SHEETS 1 & 2);				
		REMOVED MOTORS FROM SPECIFICATION TABLES &				
		ADDED IMFR'S CERTIFICATION NO.				
	A05	05) REMOVED FM-APPROVED HANDGUN ASSY 1083120	DC	RJF	PE601120	30JUL08
		FROM APPROVED EQUIPMENT LISTING (SHEETS 1 & 2).				
C5	A06	06) PART NUMBER ERROR CORRECTION (SHEET 2).	DC	RJF	PE601509	12MAR09
	A07	07) REMOVED 1082819, 1082843, 1082844, 1084512,	DRJ	RJF	PE601681	04AUG09
		1084514, 1084517, 1087272, 1087273, 1087274, &				
		1087275; ADDED 1097072, 1097073, 1097074, & 1097075;				
		UPDATED MPS PICTORIALS.				
	A08	08) UPDATED ENCORE HANDGUN PICTORIALLY. NEW	BB	BDM	PE602105	24JUN10
		ENCORE HANDGUN PART NUMBERS UPDATED IN				
		APPROVED EQUIPMENT TABLES.				
	10	09) UPDATE PG.1 & 2 FOR NEW 230V P/N				
		10) UPDATE VIBRATORY MOTOR VIEW, PG.2	DM	DU	PE602591	05AUG11
	11	1600745 WAS 1102625	DM	BP	PE602297	28NOV11
	12	12) RESV'D DESCRPTN, TABLES AND ASSEMBLIES TO	MHH	BDM	PE602609	07FEB12
		REFLECT 'XT' VERSION (SHEETS 1 & 2)				
	13	13) REMOVED ENCORE XT CONROLLER 1087276 &	DC	RJF	PE603075	22OCT13
		ADDED 1604125; UPDATED MOBILE SYSTEM VIEWS.				
	14	14)ADDED "HD" PRODUCTS & "XT" DESIGNATIONS,UPDATE TABLES, MOTOR CERT # WAS TUV05ATEX2768X(PG.2)	MB	RJF	PE603483	05MAR15
	15	15) ADDED ITEM 1609709, CHANGED PART# 1606272 TO 1606978 AND PART#1606271 TO 1606977	NHY	TF	PE604849	24MAY16
	16	16) ADDED POS KV MULTIPLIER (1609048)	RF	RJF	PE605057	01NOV16
	17	SHT 1. CORRECTED TABLE ENTRIES FOR 1606978 AND 1606977; BOTH SHEETS: ADDED TABLE ROWS FOR HD+ PUMP, ADDED NOTES FOR HD+ OPTION;	EW	BF	PE605057	21NOV17
	19	ADDED: 18) OPTIONAL LED LIGHT; 19) BOM P/N'S W/ LED	TAL	BDM	PE-100225	22MAY18

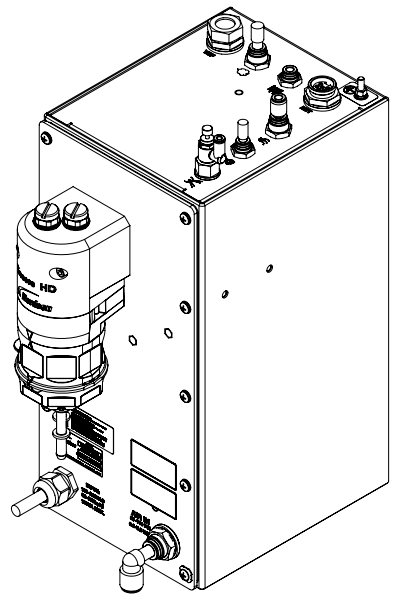

14

ENCORE HD CONTROLLER POWER UNIT W/HD OR HD+ PUMP
WITH HD PUMP
1605586 FOR 230V VBF
1605584 FOR 115V VBF
WITH HD+ PUMP
1611089 FOR 230 VBF 17
1611086 FOR 115 VBF

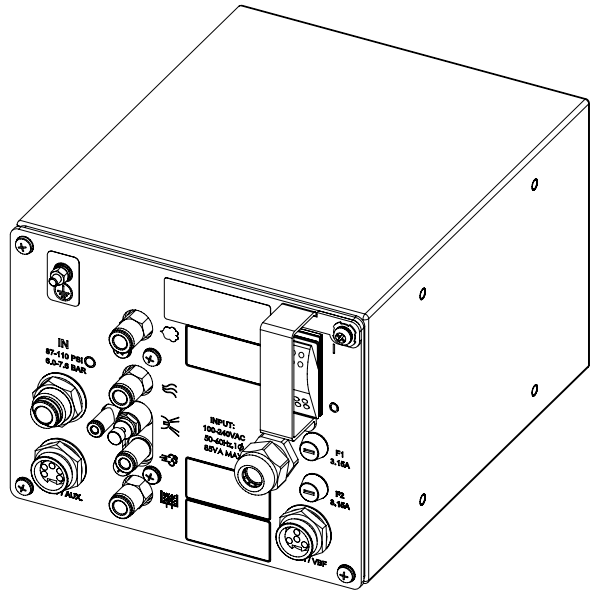

ENCORE XT CONTROLLER POWER UNIT
1082815 FOR 230V VBF
1600468 FOR 115V VBF

13 10

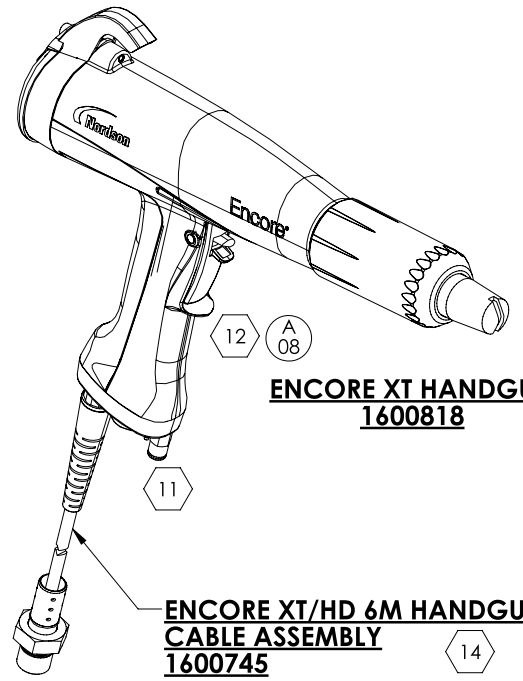

12 A 08

ENCORE XT HANDGUN
1600818

11

ENCORE XT/HD 6M HANDGUN CABLE ASSEMBLY
1600745 14

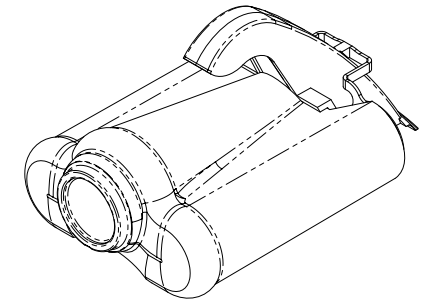

18

nLIGHTEN 1611977
OPTIONAL LED LIGHT KIT

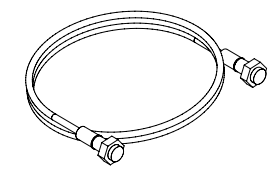

14 15

CONTROLLER INTERFACE CABLE
1080718-10FT.
1609709-50FT.
1080719-30IN.

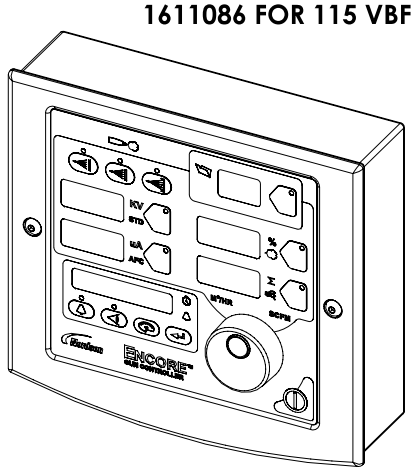

13 14

ENCORE XT/HD INTERFACE CONTROL UNIT
1604125

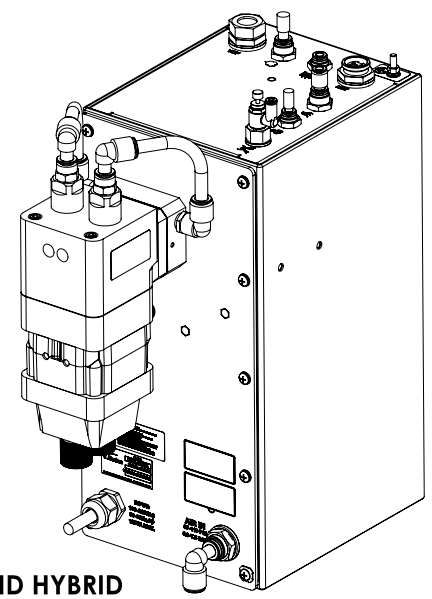

ENCORE HD HYBRID
POWER UNIT W/PRODIGY PUMP
1606978 FOR 230V VBF
1606977 FOR 115V VBF 15

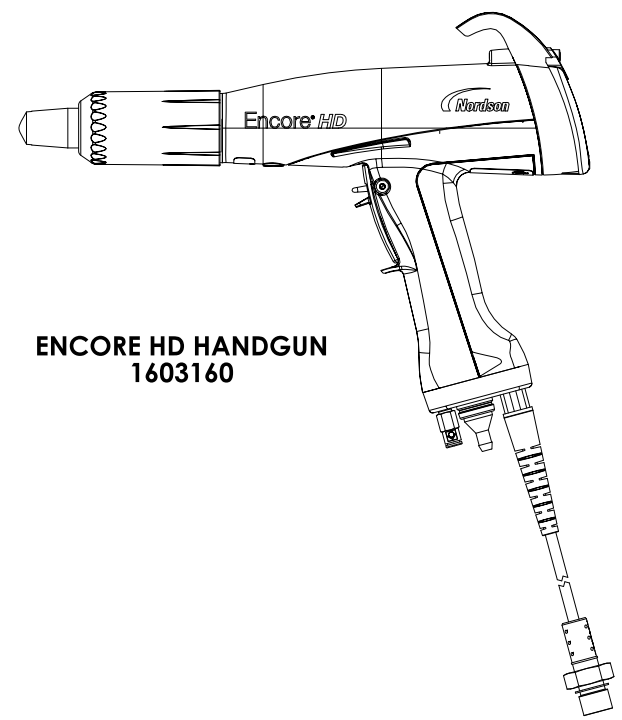

ENCORE HD HANDGUN
1603160

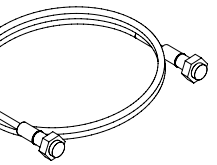

6M HANDGUN CABLE EXTENSION,
6-CONDUCTOR, SHIELDED.
1085168

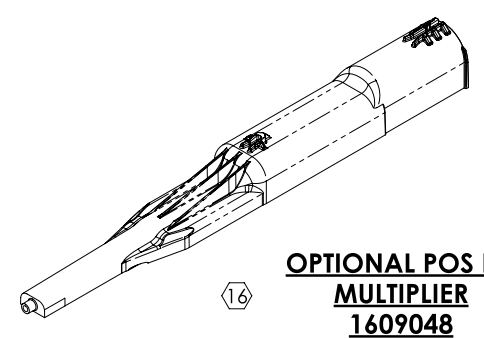

16

OPTIONAL POS KV
MULTIPLIER
1609048

	PART NUMBER	DESCRIPTION	cFMus	cFMus / ATEX	NOTE
THE FOLLOWING CONTROLLERS AND ASSOCIATED CABLES ARE SUITABLE FOR CLASS II, DIV. 2, GROUP F & G HAZARDOUS (CLASSIFIED) LOCATIONS OR ZONE 22.	1604125	ENCORE XT/HD INTERFACE CONTROL UNIT		X	XT & HD
	1082815	ENCORE XT CONTROLLER POWER UNIT, RELAY BOARD SET UP FOR 230V, 50HZ, VBF OPTION		X	XT
	1600468	ENCORE XT CONTROLLER POWER UNIT, RELAY BOARD SET UP FOR 115V, 60HZ, VBF OPTION	X		XT
	1605586	ENCORE HD CONTROLLER POWER UNIT, RELAY BOARD SET UP FOR 230V, 50HZ, VBF OPTION		X	HD WITH HD PUMP
	1605584	ENCORE HD CONTROLLER POWER UNIT, RELAY BOARD SET UP FOR 115V, 60HZ, VBF OPTION	X		HD WITH HD PUMP
	1606978	ENCORE HD HYBRID CONTROLLER POWER UNIT, RELAY BOARD SET UP FOR 230V, 50HZ, VBF OPTION		X	HD WITH PRODIGY PUMP
	1606977	ENCORE HD HYBRID CONTROLLER POWER UNIT, RELAY BOARD SET UP FOR 115V, 60HZ, VBF OPTION	X		HD WITH PRODIGY PUMP
	1611086	ENCORE HD CONTROLLER POWER UNIT, RELAY BOARD SET UP FOR 115V, 60HZ VBF OPTION	X		HD WITH HD+ PUMP
	1611089	ENCORE HD CONTROLLER POWER UNIT, RELAY BOARD SET UP FOR 230V, 50HZ OPTION		X	HD WITH HD+ PUMP
	1609709	CONTROLLER INTERFACE CABLE 50 FT		X	XT & HD
	1080718	CONTROLLER INTERFACE CABLE 10 FT		X	XT & HD
	1080719	CONTROLLER INTERFACE CABLE 30 INCH		X	XT & HD
THE ABOVE EQUIPMENT IS APPROVED FOR USE WITH THE FOLLOWING GUNS AND CABLES IN A CLASS II, DIV. 1, GROUP F & G HAZARDOUS (CLASSIFIED) LOCATION OR ZONE 21	1600818	ENCORE XT HANDGUN		X	XT
	1603160	ENCORE HD HANDGUN		X	HD
	-	-THIS POSITION BLANK-	-	-	-
	1097489	ENCORE AUTOMATIC GUN BAR MOUNT (CAN BE USED IN ROBOT APPLICATIONS)		X	WITH XT CONTROLS
	1605436	CABLE,SPRAY GUN,ROBOT,AUTO,ENCORE		X	WITH XT & HD CONTROLLS
	1600745	ENCORE XT/HD 6 METER HANDGUN CABLE		X	XT & HD
	1605168	6 METER HANDGUN CABLE EXTENSION		X	XT & HD
OPTIONAL KIT FOR APPLICATOR	1611977	NLIGHTEN LED KIT	X		XT & HD

15 12 A 07 — 17

14 09

13 A 05 A 08

17

18

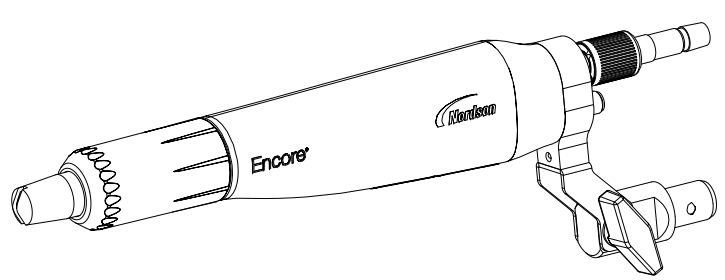

ENCORE AUTOMATIC GUN - 1097489
OPTIONAL 90 DEGREE EXTENSION- 1604084
ENCORE AUTOMATIC GUN CABLE - 1605436 14

CRITICAL
No revisions permitted without approval of the proper agency.

ALL DIMENSIONS IN MM EXCEPT AS NOTED	NORDSON CORPORATION WESTLAKE, OH, U.S.A. 44145		
X±0.8 X.X±0.25 X.XX±0.13	DESCRIPTION		
MACHINED SURFACES 1.6	REF DWG,APVD EQUIP,MANUAL ENCORE XT HD 12 14		
BREAK INSIDE/OUTSIDE CORNERS 0.1/0.8	DRAWN BY DRJ	DATE 11JAN08	RELEASE NO. PE600468
THREAD LENGTH DIMENSIONS ARE FULL THREAD	CHECKED BY RJF	APPROVED BY RJF	
INTERPRET DRAWINGS PER ASME Y14.5-1994	SIZE D	FILE NAME 1084547	MATERIAL NO. 1084547 / REVISION 19
PERFECT FORM AT MMC REQUIRED FOR INTERRELATED FEATURES			
THIRD ANGLE PROJECTION	SCALE NOT TO SCALE	SOLIDWORKS GENERATED DWG.	SHEET 1 OF 2

MATERIAL NO. 1084547 REVISION 19

ZONE	REV	DESCRIPTION	BY	CHK	RELEASE NO.	DATE
		(SEE SHEET 1 FOR REVISION HISTORY.)				

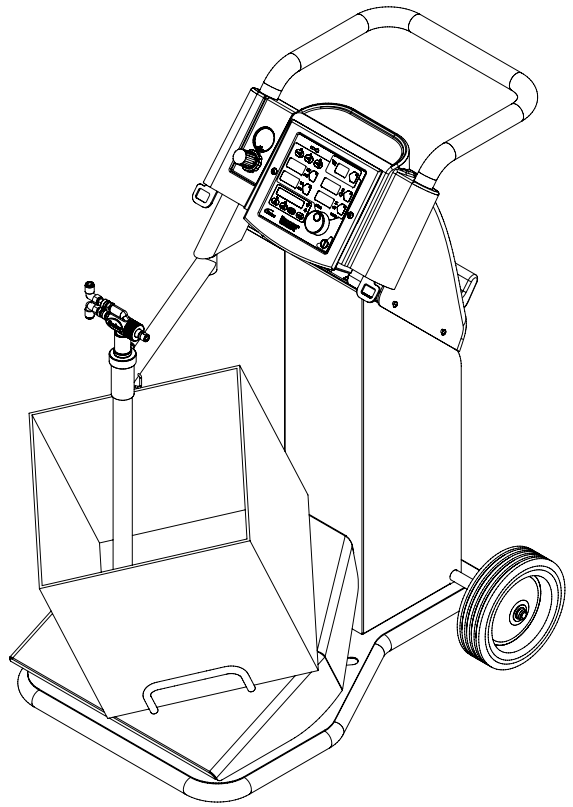

13

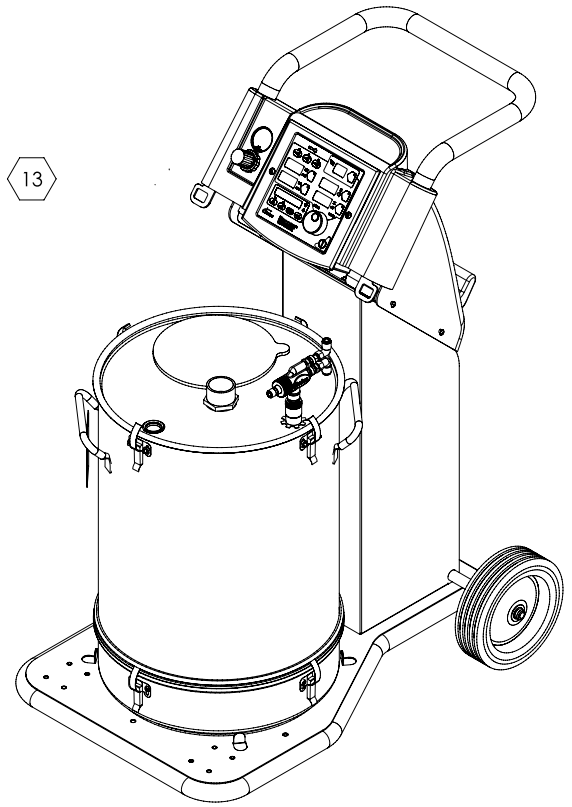

ENCORE 115V 60Hz & 230V 50Hz VBF MOBILE POWDER SYSTEMS 1600827 OR 1600828 1613882 OR 1613884 (W/nLIGHTEN)

19 12

HEIGHT: 1078 [42.5]
WEIGHT: 50.8kg [112lbs]
wheel base: 620 [24.4] L X 511.5 [20.1] W

ENCORE XT 50LB HOPPER MOBILE POWDER SYSTEM 1600829 OR 1613885 (W/nLIGHTEN)

14 12 13 A 04

19 12

HEIGHT: 1078 [42.5]
WEIGHT: 54.4kg [120lbs]
wheel base: 620 [24.4] L X 511.5 [20.1] W

ENCORE HD 115V & 230V VBF MOBILE POWDER SYSTEMS 1605588 OR 1605589 FOR HD PUMP 1611076 OR 1611079 FOR HD+ PUMP 1613900 OR 1613901 FOR HD PUMP (W/nLIGHTEN) 1613905 OR 1613906 FOR HD+ PUMP (W/nLIGHTEN)

19 17 14

HEIGHT: 1078 [42.5]
WEIGHT: 50.8kg [112lbs]
wheel base: 620 [24.4] L X 511.5 [20.1] W

ENCORE XT 25LB HOPPER MOBILE POWDER SYSTEM 1600830 OR 1613886 (W/nLIGHTEN)

A 08

HEIGHT: 1078 [42.5]
WEIGHT: 53kg [117lbs]
wheel base: 620 [24.4] L X 511.5 [20.1] W

19 12

ENCORE HD 115V & 230V HYBRID VBF (WITH PRODIGY) MOBILE POWDER SYSTEMS 1606274 OR 1606275

HEIGHT: 1078 [42.5]
WEIGHT: 50.8kg [112lbs]
wheel base: 620 [24.4] L X 511.5 [20.1] W

ENCORE HD 50LB HOPPER MOBILE POWDER SYSTEMS 1605587 FOR HD PUMP 1611246 FOR HD+ PUMP 1613899 FOR HD PUMP (W/nLIGHTEN) 1613910 FOR HD+ PUMP (W/nLIGHTEN)

19 17

HEIGHT: 1078 [42.5]
WEIGHT: 54.4kg [120lbs]
wheel base: 620 [24.4] L X 511.5 [20.1] W

ENCORE HD HYBRID 50LB HOPPER MOBILE POWDER SYSTEMS (WITH PRODIGY) 1606273

HEIGHT: 1078 [42.5]
WEIGHT: 54.4kg [120lbs]
wheel base: 620 [24.4] L X 511.5 [20.1] W

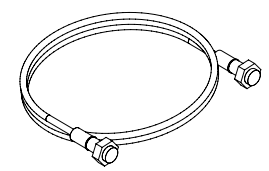

CONTROLLER INTERFACE CABLE 1080718-10 FT. 1609709-50FT. 1080719-30 IN.

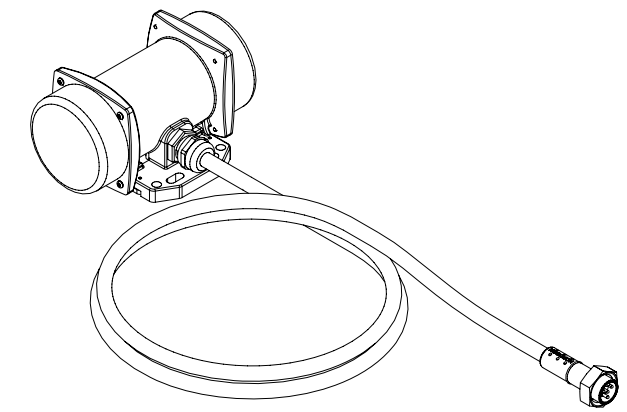

115V VIBRATOR MOTOR 1604511 230V VIBRATOR MOTOR 1080950

WITH EXTRA-HARD USAGE ELECTRICAL CORD
UL/CSA APPROVED 18 AWG 90°C

14 10 A 04

MANUFACTURER'S CERT. #: TUV12ATEX094817
ALSO: ETL CERTIFIED FOR U.S & CANADA

19

	PART NUMBER	DESCRIPTION	cFMus	ATEX	cFMus / ATEX
THE FOLLOWING MOBILE SYSTEMS ARE SUITABLE FOR CLASS II, DIV. 2, GOUP F & G HAZARDOUS (CLASSIFIED) LOCATIONS OR ZONE 22. THE MANUAL GUNS AND GUN CABLES ATTACHED TO THE MOBILE SYSTEM, ARE SUITABLE FOR USE IN A CLASS II, DIV. 1, GROUP F & G HAZARDOUS (CLASSIFIED) LOCATION OR ZONE 21.	1600827	ENCORE XT MOBILE SYSTEMS WITH 115V, 60HZ VBF	X		
	1613882	SYS,MOBILE POWDER,115V VBF,ENCORE XT,LED	X		
	1600828	ENCORE XT MOBILE SYSTEMS WITH 230V, 50HZ VBF		X	
	1613884	SYS,MOBILE POWDER,230V VBF,ENCORE XT,LED	X		
	1605588	ENCORE HD MOBILE SYSTEMS WITH 115V, 60HZ VBF WITH HD PUMP	X		
	1613900	SYS,MOBILE POWDER,115V VBF,ENCORE HD,LED	X		
	1605589	ENCORE HD MOBILE SYSTEMS WITH 230V, 50HZ VBF WITH HD PUMP		X	
	1613901	SYS,MOBILE POWDER,230V VBF,ENCORE HD,LED	X		
	1606274	ENCORE HD HYBRID MOBILE SYSTEMS WITH 115V, 60HZ VBF WITH PRODIGY PUMP	X		
	1606275	ENCORE HD HYBRID MOBILE SYSTEMS WITH 230V, 50HZ VBF WITH PRODIGY PUMP		X	
	1611076	ENCORE HD MOBILE SYSTEM WITH 115V, 50 HZ VBF WITH HD+ PUMP	X		
	1613905	SYS,MBL PWDR,115VBF,ENCORE HD,HI-FLO,LED	X		
	1611079	ENCORE HD MOBILE SYSTEM WITH 230V, 50 HZ VBF WITH HD+ PUMP		X	
	1613906	SYS,MBL PWDR,115VBF,ENCORE HD,HI-FLO,LED	X		
	1600829	ENCORE XT MOBILE SYSTEM WITH 50 LB HOPPER			X
	1613885	SYS,MOBILE PWDR,50-LB HOP,ENCORE XT,LED	X		
	1600830	ENCORE XT MOBILE SYSTEM WITH 25 LB HOPPER			X
	1613886	SYS,MOBILE PWDR,25-LB HOP,ENCORE XT,LED	X		
	1605587	ENCORE HD MOBILE SYSTEM WITH 50 LB HOPPER AND HD PUMP			X
	1613899	SYS,MOBILE PWDR,50 LB HOPR,ENCORE HD,LED	X		
	1606273	ENCORE HD MOBILE SYSTEM WITH 50 LB HOPPER AND PRODIGY PUMP			X
	1611246	ENCORE HD MOBILE SYSTEM WITH 50 LB HOPPER AND HD+ PUMP			X
	1613910	SYS,MBL PWDR,50 LB HOP,ENCORE HDXD,LED	X		

17

17

11 14

CRITICAL
No revisions permitted without approval of the proper agency.

ALL DIMENSIONS IN MM EXCEPT AS NOTED
X±0.8 X.X±0.25 X.XX±0.13
MACHINED SURFACES 1.6
BREAK INSIDE/OUTSIDE CORNERS 0.10/0
THREAD LENGTH DIMENSIONS ARE FULL THREAD
INTERPRET DRAWINGS PER ASME Y14.5-1994
PERFECT FORM AT MMC REQUIRED FOR INTERRELATED FEATURES
THIRD ANGLE PROJECTION

NORDSON CORPORATION
WESTLAKE, OH, U.S.A. 44145

DESCRIPTION: REF DWG,APVD EQUIP,MANUAL ENCORE XT HD 12

DRAWN BY	DATE	RELEASE NO.
DRJ	11JAN08	PE600468
CHECKED BY: RJF	APPROVED BY: RJF	

SIZE	FILE NAME	MATERIAL NO.	REVISION
D	1084547	1084547	19

SCALE NOT TO SCALE | SOLIDWORKS GENERATED DWG. | SHEET 2 OF 2